ORDINANCE NO. 380

AN ORDINANCE OF THE CITY OF WOODINVILLE, WASHINGTON, AMENDING THE TRANSPORTATION INFRASTRUCTURE STANDARDS AND SPECIFICATIONS, PART 1-2.3 "AS-BUILTS" AS ADOPTED BY WMC 12.09.010, AND ESTABLISHING AN EFFECTIVE DATE.

WHEREAS, the City is the official custodian of public records for development within its corporate limits; and

WHEREAS, the public seeks from the City records on past construction projects for both public and private property; and

WHEREAS, the City Standards currently require that all development submit information on all public improvements, including utilities, within the public right-of-way for its records; and

WHEREAS, the City is interested in ensuring that the City's records provide critical information on essential services that may be difficult to locate on private property; and

WHEREAS, the City has identified storm, water, and sewer as those essential services; and

WHEREAS, the City wants this information to be incorporated into its electronic information system; and

WHEREAS, on 1 November 2004, the City Council supported the need for private property storm, sewer, and water system records to be provided by new development and directed staff to change the City Standards to incorporate this requirement; the City Council has supported that; and

WHEREAS, the City of Woodinville Council desires to amend the City of Woodinville's Transportation Infrastructure Standards and Specifications to include the requirement of private storm, sewer, and water system records from all new development:

NOW, THEREFORE,

THE CITY COUNCIL OF THE CITY OF WOODINVILLE, WASHINGTON, DOES ORDAIN AS FOLLOWS:

Section 1. Standards Amendment - Part 1-2.3 of the City of Woodinville Transportation Infrastructure Standards and Specifications, as adopted by WMC 12.09.010, is hereby re-titled and amended to provide as follows:

1-2.3 Drawings of Record (Construction Corrected Record)

Prior to the final acceptance of any site work, the applicant shall furnish the Public Works Director two neatly and legibly marked sets of full-size (Xerox type) photo static Mylar drawings of the approved construction plans showing any and all changes in the final locations of all items within the public right-of-way and public access easements of work including, but not limited to, curb and gutter, storm drain lines, water lines, sewer lines, catch basins, manholes, fire hydrants, valves, street trees, and new and existing utilities and their appurtenances included in the work. In addition the construction plans must show all storm, sanitary sewer, and potable water system work on private property including, but not limited to, storm drain lines, water lines, sewer lines, catch basins, manholes, fire hydrants, valves, clean outs, water quality systems, storm detention/retention systems, and their appurtenances included in the work.

Marking of the drawings shall accurately represent all changes, both vertical and horizontal, as recorded at the time the material and equipment are installed. Include the words "Drawings of Record" with the current date on each sheet of the plans.

A computer file of the drawings of record (construction corrected record) shall be submitted in conjunction with the mylar drawings. The computer file shall be capable of being imported to AutoCAD (check with City for current version). Please refer to Section 1-2.2.1 of these Standards for information on plan format.

Drawings of Record shall be required for private and public construction in accordance with the following:

Private Development (submit to Permits Center)

1) *Subdivisions, Short Subdivisions, and Utilities Extensions* – Final acceptance of the improvements within the public right-of-way will be withheld until after the Drawings of Record have been submitted and approved.

2) *Commercial* – Final acceptance of the improvements within the public right-of-way and the Certificate of Occupancy will be withheld until the Drawings of Record have been submitted and approved.

Public Works Projects (submit to Public Works Department)

Drawings of Record drawings shall be considered an item on the contractor's punch list. Until all items on the punch list are completed, the project will not be sent to the City Council for approval. Final acceptance and payment will be withheld until the Drawings of Record drawings are submitted and approved.

Section 2. Severability. If any section, sentence, clause or phrase of this ordinance should be held to be invalid or unconstitutional by a court of competent jurisdiction, such invalidity or unconstitutionality shall not affect the validity or constitutionality of any other section, sentence, clause or phrase of this ordinance.

Section 3. Effective Date. This ordinance or a summary thereof consisting of the title shall be published in the official newspaper of the City of Woodinville, and shall take effect and be in full force five (5) days after publication.

CITY OF WOODINVILLE

MAYOR, DON BROCHA

ATTEST/AUTHENTICATED:

SANDRA PARKER
CITY CLERK/CMC

APPROVED AS TO FORM
OFFICE OF THE CITY ATTORNEY:

BY

PASSED BY THE WOODINVILLE COUNCIL: 11-15-2004
PUBLISHED: 11-22-2004
EFFECTIVE DATE: 11-27-2004
ORDINANCE NO. 380

ATTACHMENT B

Excerpt from 1999 City Standards

Revised: 2 November 2004

1-2.3 ~~As-builts~~ Drawings of Record (Construction Corrected Record) ~~Drawings~~

Prior to the final acceptance of any *site* work, the applicant shall furnish the Public Works Director two neatly and legibly marked sets of full-size (Xerox type) photo static Mylar drawings of the approved construction plans showing any and all changes in the final locations of all items *within the public right-of-way and public access easements* of work including, but not limited to, curb and gutter, storm drain lines, water lines, sewer lines, catch basins, manholes, fire hydrants, valves, street trees, and new and existing utilities and their appurtenances included in the work. ***In addition the construction plans must show all storm, sanitary sewer, and potable water system work on private property including, but not limited to, storm drain lines, water lines, sewer lines, catch basins, manholes, fire hydrants, valves, clean outs, water quality systems, storm detention/retention systems, and their appurtenances included in the work.*** ~~Refer to specific sections of these Standards for requirements for each type of work.~~

Marking of the drawings shall accurately represent all changes, both vertical and horizontal, as recorded at the time the material and equipment are installed. Include the words "~~As-builts~~*Drawings of Record*" with the current date on each sheet of the ~~as-builts~~ plans.

A computer file of the ~~as-builts~~ *drawings of record* (construction corrected record) ~~drawings~~ shall be submitted in conjunction with the mylar drawings. The computer file shall be capable of being imported to AutoCAD (check with City for current version). Please refer to Section 1-2.2.1 of these Standards for information on plan format.

~~As-builts~~ *Drawings of Record* shall be required ~~whether~~ for private ~~or~~ *and* public construction in accordance with the following:

<u>Private Development (submit to Permits Center)</u>

3) *Subdivisions, Short Subdivisions, and Utilities Extensions* – Final acceptance of the improvements within the public right-of-way will be withheld until after the ~~as-builts~~ *Drawings of Record* ~~drawings~~ have been submitted and approved.

4) *Commercial* – Final acceptance of the improvements within the public right-of-way and the Certificate of Occupancy will be withheld until the ~~as-builts~~ *Drawings of Record* ~~drawings~~ have been submitted and approved.

<u>Public Works Projects (submit to Public Works Department)</u>

~~As-builts~~ *Drawings of Record* drawings shall be considered an item on the contractor's punch list. Until all items on the punch list are completed, the project will not be sent to the City Council for

approval. Final acceptance and payment will be withheld until the ~~as-built~~ *Drawings of Record* drawings are submitted and approved.

TRANSPORTATION INFRASTRUCTURE STANDARDS AND SPECIFICATIONS

1999 Edition
(2004 Amendment)

Prepared by

City of Woodinville
17301 133rd Avenue NE
Woodinville, WA 98072

City of Woodinville
Transportation Infrastructure Standards and Specifications

CONTENTS

- Foreword
- Acknowledgments
- Introduction
- Part 1 – Design Requirements
- Part 2 – Construction Specifications
- Part 3 – Standard Details
- Appendix A – Traffic Calming

FOREWORD

The Transportation Citizen Advisory Panel was established in January 1997 by the Planning Commission to create new City of Woodinville Public Infrastructure Standards and Specifications (Standards). These Standards are intended to guide the development of the City's infrastructure system in support of the City's vision for the future.

Woodinville is one of the fastest growing cities in western Washington. This fact underscores the critical nature of the challenges that face the City's systems. Travel within and through Woodinville is heavily dependent on the automobile. A limited arterial system, limited transit service, and limited non-motorized travel facilities characterize much of the City's current transportation system, and the challenges and opportunities for its future betterment. Woodinville's rivers, lakes, wetlands, and streams are a significant part of our natural beauty and rich heritage. Spawning salmon, meandering rivers and streams, and clean water are important natural resources, which must be managed wisely to protect their value. These Standards are intended to ensure that the City's infrastructure and its management meet the needs of the City's future populace and economy.

The Transportation Citizen Advisory Panel, along with City staff and Woodinville citizens, developed the Comprehensive Plan. It contains goals and policies that will guide the City of Woodinville in its actions and decisions affecting the City's infrastructure. Many of the Comprehensive Plan elements, such as Land Use, Community Design, Economic Development, and Public Facilities, contain goals and policies that address infrastructure design issues. The Comprehensive Plan also presents a Vision Statement that relays the value that the community places on well-developed City systems. To fulfill the City's Vision Statement, the Public Works Department is charged with developing plans, programs, and regulations to ***"Preserve our Northwest woodland character, our open space, and our clean environment... to enhance our ability to move freely throughout the community by all modes of travel".*** These Standards are a specific tool used to carry out the goals and policies of the Comprehensive Plan. By adopting these standards, the City acknowledges the quality of life issues which are supported by a well-managed transportation system and surface water infrastructure.

ACKNOWLEDGMENTS

The City would like to acknowledge those individuals, both past and present, who spent many hours contributing to the development of the *Transportation Infrastructure Standards and Specifications.*

City Council
Don Brocha, Mayor
Scott Hageman, Deputy Mayor
Bob Miller, Council Member
Marsha Engel, Council Member
Barbara Solberg, Council Member
Randy Ransom, Council Member
Carol Bogue, Council Member

Planning Commission
Gareth Grube, Chair
Leonard McNally, Vice-Chair
Cherry Jarvis, Commissioner
Maria Morris, Commissioner
Gina Leonard, Commissioner
John Janson, Commissioner
Terry DePolo, Commissioner

Transportation Citizen Advisory Panel (TCAP) Members
Gareth Grube
Rodney Audin
Roger Mason
Len McNally
Thorton Percival
Don Sirkin

City Staff
Michael Monken
Deborah Knight
Joseph Seet
Andrew Laski
Ron Cameron (past)
Kurt Latt (past)

Consultants
Peter DeBoldt, Entranco, Inc.
Dale LeMaster, Entranco, Inc.
Collie Hough-Beck, Hough-Beck & Baird
Brian Krcelic, CH2M Hill

INTRODUCTION

The 1999 Edition of the *City of Woodinville Transportation Infrastructure Standards and Specifications* (Standards) has been prepared by the Public Works Department of the City of Woodinville in accordance with adopted City ordinances, the comprehensive plan, and adopted policies and procedures. This document contains the City of Woodinville's Public Infrastructure Standards for the Department of Public Works.

The purpose of these Standards is to establish the minimum requirements applicable to developers, City staff, and others engaged in the physical development of the transportation system, storm drainage facilities, parks, and recreational facilities in the City of Woodinville. The specific intent of the City is that Standards contained in this document shall be used in new development projects and modification of existing improvements. This document, therefore, is to be used as a resource by City staff, citizens, developers, contractors, and design professionals. These Standards shall apply whenever work is performed in the City of Woodinville, including work performed by private parties at their own expense under authority granted by ordinance(s) of the City Council and/or permit process of the City of Woodinville.

It is the City's intention to encourage consistent and acceptable implementation of physical aspects of development. These Standards are based upon and implement City Policies, Codes, and Ordinances. While the Standards contained in this document are for development within the City of Woodinville, these Standards are also intended to be utilized in applicable circumstances where the City's service areas, annexation areas, or Planning areas extend outside physical City limits pursuant to an approved City-County interlocal agreement.

The City's goal is to encourage exceptional project design. Although these Standards are intended to apply uniformly to physical development within Woodinville, they may not apply precisely to all situations. Compliance with these Standards does not relieve the designer of the responsibility of applying conservative and sound professional judgment to protect the safety, health, and welfare of the general public. These are minimum standards and are intended to assist, not to substitute for, competent work by design professionals. Special conditions and environmental constraints may necessitate more stringent design than would normally be required under these Standards. Neither is it the intent of the City to limit unreasonably any innovative or creative effort which could result in a superior result based upon the performance criteria of safety, economical maintenance, and aesthetic appearance. In those circumstances, the expectation is that those individuals involved in the design profession will bring to each project the best skills from their respective disciplines.

City staff are expected to use professional judgment in requiring more than the minimum Standards under circumstances where implementation of the standards contained herein would not satisfy the needs of special conditions or environmental constraints.

In general, development will follow two guidelines. The west side of the City is defined as reflecting an urban emphasis. The east side (the "Leota" area illustrated in Figure 1.2 of the City's Comprehensive Plan) of the City reflects a rural bias. Therefore, appropriate design unique to each is encouraged.

Proposed departures from the Standards will be reviewed in a formal deviation process as defined in this document. A proposed design solution which varies from these Standards will be evaluated on the basis that the proposed design will produce a comparable result, in every way optimal for the user, City, and the city residents.

These Standards are regularly updated to incorporate and address new technology, changes in policy and procedures, and methods of design and construction. A list of manual holders will be kept, and those desiring updates will be asked to fill out a card to enable a receipt of new chapters or changes as they occur.

Please report any errors or suggestions for this document to the Public Works Director at:

City of Woodinville
Public Works Department
17301 133rd Avenue NE
Woodinville, WA 98072
(425) 489-2700

City of Woodinville
Transportation Infrastructure Standards and Specifications

PART 1
DESIGN REQUIREMENTS

Table of Contents

Section **Page No.**

1-1. GENERAL CONDITIONS 1.1
- 1-1.1 Standards 1.1
- 1-1.2 Government Adopted Acts, Codes, and Plans 1.1
- 1-1.3 References 1.2
- 1-1.4 Definitions and Abbreviations 1.2
- 1-1.5 Guarantees, Bonds, and Insurance 1.5
  - 1-1.5.1 Performance Bonds 1.6
  - 1-1.5.2 Maintenance Bonds 1.7
  - 1-1.5.3 Insurance 1.7
- 1-1.6 Permits 1.8
  - 1-1.6.1 Requirements 1.8
  - 1-1.6.2 Permit Application 1.9
  - 1-1.6.3 Permit Review Process 1.10
  - 1-1.6.4 Performance and Maintenance Bonds Required 1.10
- 1-1.7 Rights-of-Way and Easements 1.10
  - 1-1.7.1 Rights-of-Way 1.10
  - 1-1.7.2 Easements 1.11
- 1-1.8 Deviation from Standards 1.12

1-2. PLANS AND REPORTS TO SUBMIT FOR APPROVAL 1.13
- 1-2.1 Traffic Studies 1.13
  - 1-2.1.1 Responsibility and Purpose 1.13
  - 1-2.1.2 Traffic Impact Analysis Guidelines 1.14
- 1-2.2 Plans 1.16
  - 1-2.2.1 General Format 1.16
  - 1-2.2.2 Required General Data 1.17
  - 1-2.2.3 Drawing Standards 1.18
- 1-2.3 Drawings of Record (Construction Corrected Record) 1.25

1-3. GRADING, CONSTRUCTION, AND LAND ALTERATION 1.27

1-4. STREETS AND RELATED WORK 1.28
- 1-4.1 General Requirements 1.28
- 1-4.2 Street Classification and Geometrics 1.28
  - 1-4.2.1 Street Classification 1.28
  - 1-4.2.2 Street Layout 1.28
  - 1-4.2.3 Block Layout 1.30
  - 1-4.2.4 Horizontal and Vertical Street Alignment 1.31

1-4.2.5 Street Grades 1.31
1-4.2.6 Sight Distance 1.31
1-4.2.7 Intersections 1.32
1-4.2.8 Curb Return Radii 1.32
1-4.2.9 Cul-de-Sacs, Turn Arounds 1.33
1-4.2.10 Private Streets 1.33
1-4.2.11 Structural Pavement Section 1.34
1-4.3 Non-Motorized Travel Facilities 1.34
1-4.3.1 Bike Lanes 1.35
1-4.3.2 Sidewalks and Trails 1.35
1-4.4 Fire Department Access 1.35
1-4.5 Utilities 1.36
1-4.5.1 General 1.36
1-4.5.2 Joint Trenching 1.36
1-4.5.3 Standard Utility Locations Within Public Right-of-Way 1.37
1-4.6 Driveways 1.38
1-4.6.1 General 1.38
1-4.6.2 Residential Driveways 1.39
1-4.6.3 Commercial Driveways 1.40
1-4.6.4 Driveways Within Areas of Limited Street Improvements 1.42
1-4.6.5 City-Required Reconstruction of Approaches 1.43
1-4.6.6 Driveway Relocation 1.43
1-4.7 Street Illumination 1.43
1-4.7.1 General 1.43
1-4.7.2 Design Standards 1.45
1-4.8 Traffic Signals 1.48
1-4.9 Curb Ramps 1.48
1-4.10 Mailboxes 1.48
1-4.11 Rockeries and Rock Walls 1.49
1-4.12 Pedestrian Hand Railings 1.49
1-4.13 Parking Lots 1.50
1-4.13.1 Handicap Requirements 1.50
1-4.13.2 Illumination 1.50
1-4.13.3 Pedestrian Concerns 1.50
1-4.13.4 Internal Circulation 1.50
1-4.13.5 Throat Length Requirements 1.50
1-5. STORM DRAINAGE 1.51
1-5.1 Goals/Design Criteria 1.51
1-5.2 Design Requirements 1.51
1-5.2.1 Conveyance 1.51
1-5.2.2 Catch Basins 1.51
1-5.2.3 Detention 1.51
1-5.2.4 Treatment 1.51
1-5.2.5 Pipe Bedding and Trench Compaction 1.51
1-6. SANITARY SEWER 1.52
1-7. WATER 1.53

1-1. GENERAL CONDITIONS

1-1.1 Standards

These *City of Woodinville Transportation Infrastructure Standards and Specifications*, hereinafter referred to as the "Standards", shall apply whenever any work is performed within the City of Woodinville, including, but not limited to, work performed by private parties within the public right-of-way at their own expense under the authority granted by ordinance(s) of the City Council. Except where these Standards provide otherwise, design, workmanship, and materials shall conform to the appropriate standards of the most current edition of the Washington State Department of Transportation (WSDOT) and Washington State Chapter of the American Public Works Association (APWA) *Standard Specifications for Road, Bridge, and Municipal Construction*, including the APWA Supplement to Division 1, hereinafter referred to as the "WSDOT/APWA Standard Specifications", and the *Standard Plans for Road, Bridge and Municipal Construction* hereinafter referred to as the "WSDOT/APWA Standard Plans".

In addition to the above, the most current edition of the following manuals and standards shall govern all design, workmanship and materials, unless provided otherwise by the Standards and WSDOT/APWA Standard Specifications and Standard Plans:

1) King County *Surface Water Design Manual* (KCSWDM)
2) U.S. Department of Transportation, *Manual on Uniform Traffic Control Devices* (MUTCD), as amended and approved by WSDOT
3) City of Seattle, *Traffic Control Manual for In-Street Work*
4) American National Standards Institute, *Current American Standard for Street Tree Care Operations*
5) American National Standards Institute, *Current American Standard for Nursery Stock*

1-1.2 Government Adopted Acts, Codes, and Plans

All work done in the City of Woodinville shall be in accordance with the various Federal, State, County, and City acts, laws, and ordinances that apply. Specifically, the standards presented herein were developed in consideration of the most currently adopted provisions, as of the date of publication of these Standards, of the following:

1) City of Woodinville Municipal Code (WMC)
2) City of Woodinville Comprehensive Plan
3) State of Washington Shoreline Management Act
4) State and National Environmental Policy Acts (SEPA), (NEPA)
5) City of Woodinville Design Principles and Guidelines

6) City of Woodinville Tree Ordinance
7) City of Woodinville Shoreline Master Plan

1-1.3 References

The Standards were developed in consideration of the most currently adopted provisions of the following manuals and design guidelines:

1) King County Road Standards
2) WSDOT *Design Manual*
3) WSDOT *Traffic Manual*
4) WSDOT *Utilities Manual*
5) WSDOT *Construction Manual*
6) WSDOT *Sign Fabrication Manual*
7) WSDOT *Local Agency Guidelines*
8) American Association of State Highway and Transportation Officials (AASHTO) *Policy on Geometric Design of Highways and Streets*
9) AASHTO *Guide for Design of Pavement Structures*
10) American Water Works Association (AWWA) Standards
11) The Institute of Traffic Engineers (ITE) *Trip Generation* Manual and design manuals
12) Illumination Engineering Society (IES) *Design Manual*

1-1.4 Definitions and Abbreviations

Definitions:
For the purpose of this chapter, the terms, phrases, words, and their derivations have the following definitions. When consistent with the context, words used in the present tense include the future tense, words in the plural number include the singular number, and words in the singular number include the plural number. The word "shall" is always mandatory. The word "may" is permissive. Definitions from the Woodinville Municipal Code shall also apply to these Standards. The Public Works Director shall have authority to interpret the definitions.

Access easement – Property interest, usually in a strip, granted by the property owner to the City or other entity for the purpose of allowing access to a facility.

Applicant – An individual or organization proposing to conduct work governed by the Standards, and who owns the property requiring the work.

Association – An organization of persons within the same neighborhood who have authority to finance the design, construction, and maintenance of neighborhood infrastructure (i.e., sidewalks, streetlights).

Best management practices (BMPs) – Physical, structural, and/or managerial practices that, when used singularly or in combination, prevent or reduce pollution of water. (See King County Storm Water Pollution Control Manual.)

City – The City of Woodinville, Washington.

Contractor – Any person, firm, partnership, association, joint venture, or corporation or any other entity responsible for constructing a proposed project.

Cul-de-sac – Street having one end open to traffic and the other one temporarily or permanently terminated by a vehicle turnaround. (See Standard Detail 314.)

Developer – Any person, firm, partnership, association, joint venture, or corporation or any other entity who undertakes to improve residential, commercial, or industrial property or to subdivide for the purpose of resale or profit. For the purposes of this document, "improve" means any modifications requiring approval from the City of Woodinville.

Driveway – A privately maintained access to residential, commercial, or industrial properties.

Franchise area – The area defined within an individual franchise agreement entered into by the City and other party for a specified purpose. Generally, franchise areas will include street rights-of-way.

Grading – The shaping, excavating, or filling of the ground surface.

Half-street – Street constructed along edge of development, utilizing a portion of the regular width of right-of-way and permitted as an interim facility pending construction of the other half of the street by the adjacent owner.

Illicit discharge – All non-stormwater discharges to stormwater drainage systems that cause or contribute to a violation of state water quality, sediment quality, or ground water quality standards, including but not limited to sanitary sewer connections, industrial process water, interior floor drains, car washing, and gray water systems per Chapter 16.09.010 WMC.

Inspector – The Public Work Director's representative who inspects contract performance in detail.

King County Surface Water Design Manual (KCSWDM) – The manual of technical and administrative procedures established by the Public Works Director that delineates surface water design methods to be used, the level of detail of analysis required, and other details for implementation of the provisions of this chapter.

Permit Center – The City of Woodinville's Permit Center, located in City Hall.

Plat –

Short subdivision – The division of land into four or fewer lots, tracts, parcels, sites, or subdivisions for the purpose of sale, lease, development, or financing.

Formal (long) subdivision – The division of land into five or more lots, tracts, parcels, sites or subdivisions for the purpose of sale, lease, development, or financing.

Policy – Adopted action or procedure as outlined in the City of Woodinville Comprehensive Plan.

Private street – Paved route, serving up to four lots or residences, which is built and maintained by the applicant, or designated successor. The City will not maintain any private street.

Professional Engineer – A civil engineer licensed to practice in the state of Washington.

Public street – Publicly owned facility providing access, including the roadway and all other improvements, inside the right-of-way.

Public utility – A company or entity engaged in any business or service regularly supplying the public with some commodity or service that is a public need and consequence, such as natural gas, electricity, water, or sanitary sewer, including any business subject to regulation as to rates and service by the Utilities and Transportation Commission under the provisions of Title 81 of the Revised Code of Washington.

Public Works Director – Individual appointed by the City Manager as the leader of the City's Public Works Department.

Receiving bodies of water – Creeks, streams, rivers, lakes and other bodies of water into which surface waters are directed, either naturally or in manmade ditches or piped systems.

Residential street – Neighborhood or local access street.

Right-of-way – Land, property, or property interest (e.g., an easement), usually in a strip, acquired for or devoted to transportation purposes.

Sidewalk section – The portion of the driveway approach lying between the back edge of the sidewalk and the apron, plus the end slopes measured at the front edge of the sidewalk.

Utility – A company providing public service such as gas, electric power, telephone, telegraph, water, sewer, or cable television, whether or not such company is privately owned or owned by a governmental entity.

Utility easement – Property interest, usually in a strip, granted by the property owner to the City or other entity for the purpose of providing a utility.

Abbreviations:

AP	Angle Point
DNS	Determination of Non-Significance
EIS	Environmental Impact Statement
KCSWDM	King County Surface Water Design Manual
MDNS	Mitigated Determination of Non-Significance
NEPA	National Environmental Protection Act
PC	Point of Curvature
PCC	Point of Compound Curvature
PRC	Point of Reverse Curvature
PSAPCA	Puget Sound Air Pollution Control Authority
PT	Point of Tangency
PUD	Public Utility District
ROW	Right-of-Way
SEPA	State Environmental Protection Act
TIR	Technical Information Report
TRC	Technical Review Committee
UBC	Uniform Building Code
WMC	Woodinville Municipal Code
WSDOT	Washington State Department of Transportation

1-1.5 Guarantees, Bonds, and Insurance

Performance guarantees in the form of performance and maintenance bonds and insurance will be required for all work within public easements and right-of-way, as well as for public works improvements.

Acceptable methods of performance guarantees will be as follows:

1) Performance Bond
2) Assignment of Funds
3) Cash Set Aside Agreement
4) Cash Deposit
5) Irrevocable Standby Letter of Credit

Standard forms of the above referenced documents acceptable to the City will be available from the Public Works Department. Changes or substitutions for the above

noted forms will require a written request to and approval by the Public Works Director.

The developer shall provide a detailed cost of construction estimate to the City, prepared by a Professional Engineer licensed by the state of Washington, for the cost of improvements based on the approved plans. The estimate shall itemize descriptions, quantities, and unit costs. The estimate should be submitted as early as possible during the review process to allow adequate time and avoid delays in the permit issuance process. The submitted data will be reviewed by the Public Works Director for use in establishing the bond amounts. The bond amount will equal 150% of the approved Engineer's cost of construction estimate. The bond shall be submitted before any permits will be approved.

1-1.5.1 Performance Bonds

Performance bonds will be required for all improvements located in the public rights-of-way, including, but not limited to, all utilities and drainage construction as detailed on the approved plans. The following is a summary of typical bond requirements:

STREET/ALLEY

Estimated cost plus 50%; bond improvements prior to building permit issuance; for a plat, bond all improvements prior to recording plat ($1,000 minimum).

DRAINAGE/GRADING

Estimated cost of temporary erosion control plan installation and maintenance for project plus 50% ($1,000 minimum).

UTILITIES (PUBLIC)

Estimated cost plus 50%; bond improvements prior to occupancy; for a plat, bond prior to recording plat ($1,000 minimum).

LANDSCAPES

Estimated cost plus 50%; bond improvements prior to building permit issuance; for a plat, bond all improvements prior to recording plat ($1,000 minimum).

STREET TREES (PUBLIC)

Estimated cost plus 50%; bond improvements prior to building permit issuance; for a plat, bond all improvements prior to recording plat ($1,000 minimum).

The initial guarantee and subsequent extensions will be limited to two-year increments. If time extensions are approved by the Public Works Director, the bond

amount shall be revised to reflect inflation and/or other cost impacts. Utilities under Franchise Agreement with the City are exempt from providing Performance Bond.

1-1.5.2 Maintenance Bonds

Maintenance bonds will be required at the time of final acceptance of the constructed public improvements and/or improvements required by the City. The maintenance bond amount will normally be equal to 20% of the documented final cost of the improvements. The maintenance bond must be in place prior to City release of the performance bond. Methods of posting maintenance bond shall be the same as for performance bond and shall be for the lengths of time as listed below:

Street/Alley	Drainage	Utilities (Public)	Landscape
Two Years	Two Years	Two Years	Two years

1-1.5.3 Insurance

The applicant and/or contractor shall procure and maintain for the duration of the Agreement insurance against claims for injuries to persons or damage to property which may arise from, or in connection with, the performance of the work hereunder by the applicant and/or contractor, their agents, representatives, employees or subcontractors.

The applicant and/or contractor shall provide a Certificate of Insurance evidencing:

1) Automobile Liability insurance with limits no less than $1,000,000 combined single limit per accident for bodily injury and property damage.
2) Commercial General Liability insurance written on an occurrence basis with limits no less than $1,000,000 combined single limit per occurrence and $2,000,000 aggregate for personal injury, bodily injury, and property damage. Coverage shall include, but not be limited to, blanket contractual, products/completed operation, broad form property damage, explosion, collapse and underground (XCU), if applicable, and employer's liability.

Any payment of deductible or self-insured retention shall be the sole responsibility of the applicant and/or contractor.

The City shall be named as an additional insured on the Commercial General Liability insurance policy, as respect to work performed by or on behalf of the Contractor, and a copy of the endorsement naming the City as additional insured shall be attached to the certificate of insurance. The City reserves the right to receive a certified copy of all required insurance policies.

The applicant and/or contractor's insurance shall contain a clause stating that coverage shall apply separately to each insured against whom claim is made or suit is brought, except with respects to the limits of the insurer's liability.

The applicant and/or contractor's insurance shall be primary insurance as respect to the City and the City shall be given thirty (30) days prior written notice of any cancellation, suspension or material change in coverage.

1-1.6 Permits

1-1.6.1 Requirements

Permits, approvals, or agreements are required by the City, and sometimes other jurisdictions prior to beginning any construction or demolition work described within the Standards.

Most of the work covered under the Standards will require multiple permit authority review and approvals. Several types of permits and approvals require prior approval from the authority before a building or other permit of substance can be issued.

The applicant is responsible for submitting all necessary forms, documentation, and supporting data according to the requirements established for each permit.

Any questions regarding permits, approvals, and agreements should be directed to the appropriate code authority in the City's Permit Center.

The following is a list of the typical types of permits required for various projects and is only listed here for informational purposes. There may be additional permits required; these should be coordinated at the TRC meeting (see Section 1.6.3), or with appropriate City departments.

1) Right-of-Way
2) Land Surface Modification (Grading)
3) Site Development – Public/Private
4) Building
5) Electrical
6) Plubing/Mechanical
7) Landscaping

The following general categories describe the major permits, approvals, and agreements, along with the issuing permit/code authority (in parentheses). See WMC 17.07.030 for a complete list.

1) Environmental Review
   For most projects, including clearing and grading activity, an Environmental Checklist must be completed by the applicant and submitted along with plans, specifications, and other information when approval or permits are being requested for a project. The Planning Department conducts the

Environmental Review and makes a SEPA Threshold Determination for the City.

2) Construction Permits
   a) Clearing and Grading Permit (Building Department):
      A Clearing and Grading Permit is required for all significant land alterations, including plats. A Clearing and Grading Permit is typically issued in conjunction with other permits.
   b) Building Permit (Building Department):
      A Building Permit is required for all construction work including alteration, repairs, and demolition. Demolition Permits for structures greater than four thousand square ' (4,000 sq. ft.) require the submittal of an Environmental Checklist.
   c) Right-of-Way Permit (Building Department and Public Works Department):
      A Right-of-Way Permit is required for any work within the street right-of-way which is not covered by other permits and agreements. Such work may include utilities work, land closures, driveways, curbs, sidewalks, and haul routes. Permission to temporarily close a street or portion thereof for construction activities or special events is obtained through the Right-of-Way Permit.
   d) Utilities Work (Planning Department and Public Works Department):
      Permits, service requests, and applications are required for water and sewer-related items, including side sewers, fire hydrant use permits, and water meters.

3) Approvals and Other Permits
   There are several other permits or approvals which may be required and referred to in these Standards: Developer Extension Agreements; plat and short plat approvals; and Certificate of Occupancy.

   In addition, there are several other City approvals (land use) which may have been obtained prior to the above listed permits and which may affect the Standards as contained in this document: Reclassification; Condition Use; Design Review; Planned Unit Development; and Substantial Development Permit.

The approved applicant's copy of the permit(s), together with a set of plans approved by the City, shall be available on the job site at all times.

1-1.6.2 Permit Application

No permit(s) shall be issued unless a complete and appropriate written application for the issuance of applicable permit(s) is submitted to the Permit Center. The complete application must be legible, in pen or typed, and signed by the applicant.

1-1.6.3 Permit Review Process

The City has established a preliminary application review process wherein applicants may meet with the Technical Review Committee (TRC) in order to exchange information on proposed projects. The TRC is composed of City staff from the Departments of Public Works, Planning, Parks and Recreation, Permit Center, Fire, and Building.

Applicants are encouraged to schedule and attend meetings with Public Works and Permit Center staff prior to formal submission of application.

TRC meetings may be scheduled through the Planning Department by calling (425) 489-2700.

1-1.6.4 Performance and Maintenance Bonds Required

Before any permit(s), as provided in this section, can be issued, the applicant must comply with all provisions of Section 1-1.5, Guarantees, Bonds, and Insurance.

1-1.7 Rights-of-Way and Easements

Utility and roadway improvements, that are to be a part of the public system and represent a part of the City's capital improvements, shall be constructed in public rights-of-way or easements.

All necessary new rights-of-way and easements must be obtained by the applicant, approved by the City of Woodinville, and recorded with the County prior to beginning any new construction.

1-1.7.1 Rights-of-Way

The City's Comprehensive Plan has a policy of identifying rights-of-way for and planning completion of missing portions of the local roadway system, including neighborhood collectors. When new developments are proposed, completion of these missing roadways will be studied and may be required as alternatives for access (Policy T-3.3).

The City also has a policy of identifying and requiring as conditions of development approval: needed rights-of-way, strategies to reduce demand, and off-site improvements to the extent that such conditions are directly related to impact mitigation and will benefit the community (Policy T-3.10).

Deeded or dedicated right-of-way is required for all public street and roadway improvements. All portions of the traveled way, curbs, gutters, sidewalks, medians, bike lanes, drainage facilities, landscaping, and other required improvements shall be located within the right-of-way.

Where existing right-of-way width is not sufficient to construct the required improvements, the applicant shall obtain the necessary additional right-of-way and arrange for dedication to the City in a form prescribed by the City Attorney. A statutory warrantee deed will be required and must be accompanied by a current title report for the property in question.

1-1.7.2 Easements

Additional permanent and/or temporary easements for the purpose of construction, access, maintenance, sight distance preservation, roadway slopes, utility line, and storm drain installation may be required. A license to use land is not acceptable.

Permanent easements for access, maintenance, and construction are required for all driveways and private street systems serving more than one property located outside of public right-of-way. When easements are required, then legal descriptions for same shall be submitted with a professional land surveyor's (licensed in the state of Washington) stamp thereon. A current title report(s) covering the properties to be encumbered by the easements shall accompany said description.

For projects which require new roadway construction or widening of existing roadways, the applicant shall provide dedicated rights-of-way or easements to accommodate utilities. This shall include subdivisions, short plats, planned unit developments, binding site plans and certain building projects. The Woodinville Municipal Code may establish additional requirements for right-of-way dedications, setbacks, and site improvements.

A non-exclusive easement shall be reserved for and granted to all private utilities serving the subject project and their respective successors and assigns. This easement shall be a minimum of 10' wide, located parallel to and contiguous to the street right-of-way and frontage of all lots and common areas as shown in Standard Plan 100. The utilities may use the easement to install, lay, construct, renew, operate, and maintain underground conduits, cables, pipes, and wires, together with other necessary facilities and equipment. The easement shall provide right-of-entry upon the property at all times for the purposes herein stated.

Easements granted to the City of Woodinville for the placement of public utilities shall be in a form acceptable to the City. The following information shall be provided for all easements:

1) All legal descriptions shall be certified by a Professional Land Surveyor licensed in the state ofWashington.

2) A scaled drawing on 8-1/2" by 11" sheet showing the easement in a clear legible manner shall accompany all legal descriptions.

3) A separate plan shall show the following plan information:
   a) Easement limits, easement centerline, centerline stationing, bearings and distances.
   b) Location of the utility within the easement.
   c) Distance from the utility line to the easement centerline.
   d) Centerline stationing and offset for all valves, fittings, meters, hydrants, vaults, manholes,blow-off assemblies, bends, outfall structures, utility crossings, intersection with street centerlines, and property lines.
   e) Storm drain lines shall normally be located 2.5' off of the easement centerline.
   f) Easements for public utilities shall be 15' in width or greater if required by the Public Works Director to accommodate larger pipe sizes, access needs, or other special requirements.

The easements shall be recorded with the County Recorder's office for King County after acceptance of the dedication is acknowledged on the face of the document by the Public Works Director. The applicant shall provide copies of the recorded easements to the Public Works Department.

1-1.8 Deviation from Standards

Permissible alternatives different from these Standards may be approved by the Public Works Director upon review of evidence submitted by the applicant that such modifications are in the public interest, that they are based upon sound engineering judgment, and that requirements for safety, function, appearance, and maintainability are fully met. Requests for proposed alternatives should be submitted as soon as possible during the permit process to allow time for decision by the Public Works Director. A minimum of ten working days shall be permitted for a determination of acceptance, denial, or request for additional information. Upon receiving additional requested information, a minimum of ten days shall be permitted for further review and comment. Requested alternatives must be reviewed and approved prior to construction. The Public Works Director will make the decision whether a requested alternative will be permissible.

All others will be considered as a variance and will be reviewed according to the process established in the Woodinville Municipal Code. Such request may require the applicant to sign an agreement to extend the permit processing time frame if it is subject to the regulatory reform process.

Periodically, the City may modify these Standards in order to make corrections, clarify procedures, and to revise the standards and/or specifications to conform to municipal practice and new technology or state or federal standards. Proposed, substantive changes will be submitted by the Public Works Director to the City Council for adoption as amendments to the approved Standards.

1-2. PLANS AND REPORTS TO SUBMIT FOR APPROVAL

1-2.1 Traffic Studies

The impact of a development on the City and the need for infrastructure improvements will be considered in light of the City's goals, one of which is:

To provide safe, convenient, and comfortable neighborhood access and circulation properly integrated with the city-wide transportation system (Comprehensive Plan Goal T-10). To achieve that goal:

1) Development in the City of Woodinville should pay its fair share toward transportation improvements to help mitigate impacts, as identified through an adopted road adequacy standards, mitigation payment program, State Environmental Policy Act, and the development review process (Policy T-2.1).

2) Developers must prepare for review and approval, vehicle access, pedestrian access, and circulation schemes for major public or private developments, with adherence to the following standards and requirements (Policy T-2.3).

   a) Restrict vehicle access from public and private property onto designated principal and minor arterials to maintain and improve the integrity of traffic flow. Vehicle access shall be limited to collector arterials and local roads as a condition of development whenever practicable.
   b) Require joint driveway access and internal site circulation as a condition of new development for adjacent properties that have compatible land uses pursuant to adopted street standards and interim design principles.
   c) Design traffic circulation within developments in a way that allows safe and efficient storage and movement of driveway traffic.
   d) Require driveway and traffic flow restrictions to allow safe and efficient access for emergency vehicles.

1-2.1.1 Responsibility and Purpose

All developments require a Transportation Impact Analysis, the extent of which is dependent on the type of development. The primary responsibility for assessing the traffic impacts associated with a proposed development rests with the permit applicant, with the City serving in a review capacity. The study is the responsibility of the applicant and must be prepared by, or under the supervision of, a Professional Engineer, licensed in the state of Washington, with experience in traffic engineering and/or transportation planning.

The applicant's transportation professional shall contact the Public Works Director to arrange for a scoping meeting prior to submittal of a traffic study. Scoping the requirements for the study is intended to identify key issues early in the project

planning and development stage and assist the City during the review and approval process. A checklist will be prepared by City staff documenting the requirements for the study. Three copies of the traffic study must be submitted with the application for permits discussed in Section 1.6. The applicant will be notified if additional copies are needed. A copy of the completed checklist must also be submitted with the application. Studies submitted without the completed checklist will be considered incomplete. Where there is the potential for impacts to state or county routes, additional coordination may be necessary between the applicant and the Washington State Department of Transportation (WSDOT) and King County. The applicant will be required to submit two copies of the study to WSDOT with a copy of the transmittal to the City.

Traffic Impact Analysis must show how the proposed development will affect the existing transportation network. If the final use(s) of the proposed development is not determined at the time of the study, the land use with the greatest overall traffic impact must be assumed for the study. Once the City has reviewed the traffic study and comments have been returned to the applicant, all required changes must be incorporated into the study, and a revised study must be submitted to the City for final review and approval.

Adjustments related to traffic mitigation based on actual use of the proposed development may be made prior to Certificate of Occupancy as the project becomes more defined.

1-2.1.2 Traffic Impact Analysis Guidelines

While individual reports may vary in style and format, certain information must be included. The amount of detail required, as well as the overall extent of the study, will be detailed during the scoping meeting on a project specific basis. Typical information required is included below.

1) Project Description
   a) Project type and size.
   b) Project location, with vicinity map.
   c) Proposed site access, with site plan.
   d) Horizon planning year.

2) Existing Conditions
   a) Existing traffic volumes.
   b) Daily and peak hour intersection turning movement counts completed within one year prior to the application date.
   c) Roadway network, including traffic control.
   d) Level of service calculations for peak hour at intersections impacted by the project and at site entrances, if applicable. Calculation shall conform to the procedures outlined in the current Highway Capacity Manual.
   e) Parking supply.

3) Accident/Safety Conditions
   a) Accident history at intersections and access points.
   b) Sight distance analysis at intersections and access points. Minimum stopping sight distance as defined by AASHTO is required.
   c) Clear zone analysis.

4) Trip Generation and Distribution
   a) Daily and peak hour trip generation using the latest ITE Trip Generation Manual or other approved method.
   b) Trip distribution map showing daily and peak hour turning movements assigned to the roadway network. The proposed development's trips are to be distributed through the street network to a level of three peak hour trips.
   c) Parking generation analysis using the latest Woodinville codes and ordinances, ITE Parking Generation Manual, or other approved method.

5) Public Transit and Non-Motorized Facilities
   a) Identification of existing transit service.
   b) Identification of existing trails, bicycle lanes, and other non-motorized facilities.

6) Future Conditions
   a) Annual growth rate determined by actual data or other approved source. This shall include approved traffic estimates from other projects within the City.
   b) Future conditions, with and without the project with commentary on compliance with concurrency requirements as needed.
   c) Level of service calculations sheets for peak hour traffic at all intersections impacted by the project and site access points, with and without the proposed project.
   d) Parking demand analysis.
   e) Effect of proposed development on public transit and non-motorized facilities. Any transportation facilities proposed by the Comprehensive Plan which may affect the development.

7) Mitigation Measures
   a) All developments are subject to the City's Traffic Mitigation Ordinance and mitigation payments are calculated accordingly.
   b) Proposed mitigation to correct any deficiencies not addressed through the Traffic Mitigation Ordinance.
   c) Dedication of right-of-way and associated frontage improvements.
   d) Evaluation of change in accident potential with proposals to correct safety deficiencies.

8) Other
   a) Analysis of internal site circulation for vehicles, transit, non-motorized users, and handicap access.

1-2.2 Plans

1-2.2.1 General Format

When construction plans for improvements, including but not limited to water, sewer, storm drainage, and transportation improvements, are prepared and are to be constructed within the Woodinville City Limits or service area, then the project plans must meet the standards and requirements shown below.

1) All public works plans for street improvements and utility systems shall be prepared in a mylar plan/profile format either with sheets printed in half plan and half profile or with separate sheets for plan view and profile views. For all Capital Improvement Projects, all plans shall be prepared on standard City of Woodinville mylar sheets (or permanent photo mylars of these sheets), which shall be obtained from the Permit Center information counter. No "sticky-back" or pasted pieces are allowed. The standard sheet size is 22" x 34". If AutoCAD is used, City of Woodinville title block, etc., shall be incorporated into the AutoCAD drawings.

2) Scales: Use Horizontal Scale of 1" = 20', and Vertical Scale of 1" = 5' unless otherwise required or approved by the Public Works Director. (Note: Complex utility locations may require a larger scale plan to show the necessary detail.)

3) Plans shall include a key for abbreviations, a legend for symbols where such are used, and a North arrow where appropriate. Draw the plan so the North arrow points to the right or to the top of the sheet.

4) Control line distances and features shall have no dimension variations greater than 0.2' (scaled distance) on a 20-scale drawing.

5) Use of a lettering guide is preferred, but very neat, legible, free-hand lettering is acceptable. The minimum lettering size is 0.10". This is to ensure the plan is legible after microfilming or reduction to one-half size. Existing features shall be screened to one-half tone.

6) Use the standard Washington State Chapter of the American Public Works Association symbols as supplemented by these Standards.

7) Match lines with matched sheet number shall be provided where plan is drawn on two or more sheets. Where plan is shown on three or more sheets, include a total site plan index map at scale 1" = 100' or 1" = 200' to cross reference portions of the project with their corresponding plan sheet location.

8) Label all streets by their City of Woodinville names.

9) All existing and proposed improvements shall be located and dimensioned with ties to King County survey monuments, monument lines or street centerlines. Dimensioning must be done by stationing and offset from these control lines.

10) All elevations and grades on public works construction plans shall be to King County Aerial Survey datum NAVD 1988. In addition, the survey Control Network shall be based on NAD 1983/1991.

11) The Professional Engineer's seal, signature, address, and phone number shall appear in the lower right portion of each sheet.

12) In addition to mylar plan and profile sheets, all plans for major city or developer projects should be submitted with a floppy disc computer file that can be imported to AutoCAD. Within two weeks after the City has signed the approved construction plans, the Project Engineer shall provide a electronic format disk (AutoCAD and to a scale of one-to-one) of the plans.

1-2.2.2 Required General Data

All division or phase lines shall be indicated showing proposed limits of construction, rights-of-way, and limits of clearing and grading.

1) Existing and proposed topography contours shall cover the entire site and extend a minimum of 50' beyond the site boundary. Existing topography shall be screened. Topography contours shall be shown at 2' intervals (5' intervals for slopes greater than 15%, 10' intervals for slopes greater than 40%). Elevation labeling shall be shown at 10' intervals maximum.

2) Show and clearly label property lines (with distances and bearings), right-of-way lines, sensitive areas and set backs, and all existing easements with their recording numbers, and proposed easements. Show existing and proposed building footprints.

3) Show the existing and proposed right-of-way and channelization of all streets that front the proposed development. Show contours, street improvements, including all curb cuts within 200' of the subject property, on both the adjacent properties and the properties across the streets that front on the proposed development.

4) Show complete data for curb radii, utility locations (new and existing), curb elevations, street stationing, street widths, existing adjacent improvements, elevations of existing street improvements, utilities, super-elevation, curve data, vertical curve data, and all other data necessary to construct the project.

5) Plans shall be prepared with all utilities, both new and existing, shown on all sets of plans. For example, on the storm drainage plans, the water and sanitary sewers shall be shown half toned with the storm drainage portions being heavily highlighted. Other utilities shall also be shown in profile views where crossings

occur. Provide a legend of existing and proposed improvements on the first sheet of each drawing type (i.e., drainage).

Whenever possible, use notes specifying King County or WSDOT standard item numbers for common items such as catch basins, restrictors, fire hydrant assemblies, etc.

1-2.2.3 Drawing Standards

In addition to the formatting and required data listed above, the following drafting standards shall be included within the storm drainage and transportation plans as applicable. Plan and profile drawings are required for all proposed transportation-related improvements; proposed storm drainage facilities and stream channel improvements; and sewer and water improvements.

Five (5) sets of plans for public works improvements and utilities along with two (2) copies of the Storm Drainage Technical Information Report (TIR) shall be submitted with the appropriate permit application, which shall include the following items as a minimum. (Additional elements may be required dependent on project requirements.)

1) Title Sheet with Vicinity Map, Index Map (if appropriate) and references to Woodinville Public Infrastructure Standards and Details.

2) Site Topographic and Horiontal Control Plan.

3) Temporary Erosion and Sedimentation Control Plan.

4) Grading Plan.

5) Street Improvement Plan.

6) Storm Drainage Collection/Conveyance/Water Quality Treatment and Detention Plan and Profile (Drainage and Street Plans may be combined together).

7) Landscaping Plan (within right-of-way and buffer areas), including Street Tree Plan.

8) Composite Utility Plan.

9) Traffic Control Plan (detouring and/or construction sequencing, and temporary Signing Plan where necessary).

10) Cross-sections of existing and proposed construction as may be required by Public Works Director. (Note: Separate cross-section work sheets are required for street construction. Distance between cross-section locations shall be typically at 50' stations or as determined by the Public Works Director based on site topography.)

11) Details and Specifications for the above improvements, including duplicate copies of all standard drawings referenced on the plan and in the notes.

12) Other applicable drawings which may include but not be limited to: driveway schedule, signing and channelization, signalization, and illumination.

13) Drainage Technical Information Report (TIR). Design calculations for storm and surface water systems (e.g., conveyance, runoff control, runoff treatment) shall bear the signature and seal of the responsible Engineer. A thorough list of assumptions used shall also be included.

1. TITLE SHEET

Each submittal shall contain the following project information on the title sheet or first sheet:

a) Title: Project name (add explanatory note if project name has changed) and type of project.
b) Developer and Agency names.
c) Table of Contents (if more than 3 sheets).
d) Vicinity Map (scale sufficient to cover project limits on one sheet or 1" = 200', whichever is greater).
e) General description of site, including Quarter Section, Township and Range.
f) Name and phone number of engineering firm preparing plans.
g) Index map to sheets, as appropriate.
h) City of Woodinville Conditional Use and/or Shoreline Permit number; DNS or MDNS number.
i) Approvals.
j) Legend.

2. SITE TOPOGRAPHIC AND HORIZONTAL CONTROL PLAN

Show all existing underground, surface improvements, and topography within a minimum of 50' of the project. The information must be shown for the full width of the right-of-way or the easement and for a sufficient distance on either side of the right-of-way or easement to show possible impacts on adjacent properties and/or the relationship to related facilities (typically 200'). Information on existing surface and underground City of Woodinville facilities may be obtained from the Public Works Department. Other utility information may be obtained from the respective utility owners (i.e., Puget Sound Energy, U.S. West, TCI Cable, etc.).

a) Label each section or detail in the plans. Section and detail labels should be shown on both the plan and the section detail, and should include assigned section/detail numbers and plan sheet location number.

b) Sewer, Water and Drainage Improvements: Provide profiles of all proposed sewer, water and drain lines. Show existing underground improvements within 10' of where they cross or connect to the new improvements. Show the stormwater drainage discharge point to a public system or natural water course. Provide drainage system details whether or not detention of stormwater is required. Label all private facilities.

c) Grades: All profile and cross-sections must show the proposed as well as the existing grade. Utility plans shall indicate invert elevations of pipelines at all crossing points.

d) Public storm drain lines not within street right-of-way shall be within easements granted to the City of Woodinville in a form acceptable to the City. The easement widths will vary according to pipe diameter, but shall not be less than 15' wide. Easements shall be shown on the storm drainage plan sheets. (See Easement Criteria, Section 1-1.7).

e) Stationing shall be provided on all centerlines and reference lines. All intersection street centerlines, utility crossings, right-of-way lines, property lines, railroad crossings, drainage structures and signal and light poles shall be referenced by station and offset. Curve data shall be provided for roadway centerline and right-of-way curves. All PC's, PT's, PRC's, PCC's and AP's shall be stationed and offset.

3. TEMPORARY EROSION AND SEDIMENT CONTROL PLAN

The Temporary Erosion and Sedimentation Control (TESC) Plan shall show the following:

a) Existing and proposed topography.

b) Clearing limits.

c) Location and details for construction entrance.

d) Construction sequence.

e) Provisions for perimeter runoff control at property boundaries.

f) All cut and fill slopes, indicating the top and bottom of slope catch lines.

g) All necessary details to illustrate the intent of the TESC plan.

h) Interim catch basin sedimentation protection.

i) All drainage pipes and ditches. Include pipe inverts, minimum slopes and cover, with ditch grades and dimensioning.

j) Specify areas to receive special treatment such as jute matting, rock lining, sod, mulching and seeding.

k) Provide all necessary dimensioning and details for sediment traps, berms, pond storage, pond outlet structure, filtering devices, inlet/outlet stabilization techniques, control/restrictor devices, rock check dams, silt fabric fences, pond inlet baffles, and other design elements.

l) In addition, the plan shall comply with the regulations listed in the most recently adopted edition of the King County *Surface Water Design Manual*, Chapter 5, "Temporary Erosion and Sedimentation Control Standards".

4. GRADING PLAN

The site grading work shall show all existing and proposed grades, and may be incorporated or combined with the "Site Topographic and Horizontal Control Plan."

Show all off-site trees (private and public) which could be adversely affected by the proposed activity (WMC 21.16.140 and 21.16.160).

Show surveyed locations of perimeters of groves of significant trees and individual significant trees to preserve (WMC 21.16.140 and 21.16.160).

5. STREET IMPROVEMENT PLAN

Roadway improvements include but are not limited to paving, curbs, gutters, sidewalks, driveways, curb ramps, storm drainage structures, street lighting, traffic signals, signing, and channelization.

a) Establish baseline or centerline adequately dimensioned from at least two known reference points or monuments approved by the City of Woodinville.

b) Dimension all improvements off of established baseline or centerline.

c) Station all plans, with true point of origin for stationing dimensioned from monument. If 10+00 stationing point does not coincide with monument, tie in with station equation. Stationing should increase from left to right or bottom to top.

d) When possible, street improvements in right-of-way should have profile drawing beneath plan view.

e) Provide cross-sections at adequate intervals (50' maximum spacing) to assure that proposed improvements will correspond with existing conditions, and with City ordinance requirements for improvements.

f) Provide adequate information on roadway geometry, including PC, PT, PRC, PCC, AP, radius, curve angle, tangent length, curve length and all other information required to adequately establish the horizontal geometry. Provide adequate information on roadway profile, including vertical curve approach grades and length of vertical curve and all other information required to adequately establish the profile.

g) Provide spot elevations and slope call-outs where improvements abut with existing pavement. Show top of curb elevation at suitable intervals along curbline, and all break in grades. If the plan is separate from the profile, show top of curb elevation at all curb returns at intersections and at back of cul-de-sacs.

h) Provide profile drawings for all private roads, and for driveways where slope exceeds 5%.

i) Include all appropriate City of Woodinville standard details and specifications in plans.

j) Show bearings for all new roadway alignments.

k) Clearly call out existing and proposed right-of-way, with dimensions, within 50' of the project limits.

l) Show all existing and proposed easements on plans within 50' of the project limits.

m) Show location of all existing and proposed driveways. A "Driveway Schedule" which lists all of the driveways, both residential and commercial, being constructed and shall include the following information pertaining to each driveway, in tabular form:

1. Location of driveway
2. Width
3. Length
4. Surface type
5. Profile grade (may require separate sketch)

n) Design street lighting, signals, signing (both traffic control and street name signs) and channelization, per these Standards, and including appropriate City of Woodinville standard details and specifications. Also include table of wiring schedule, wiring schematic, pole schedule, table of luminaire schedule, notes and details.

o) All dimensions shall be shown on plans for special structures, with complete construction elevations and loading diagrams when applicable. All plans shall provide the necessary detail required for preparation of bar schedules and bar

placement without the necessity of making separate shop or placement drawings. Structural steel use shall include such detail that shop drawings can be prepared without additional design.

p) Each submittal shall include on the first or second sheet of the Transportation Plans a "Summary of Quantities", describing the items to be removed, relocated, or installed, and their quantities.

6. STORM DRAINAGE/WATER QUALITY TREATMENT/DETENTION PLAN AND PROFILE

a) Label all cleanouts, manholes, and catch basins in sequential number indicating size, location, and type on the plans. In profiles, label rim and invert elevations as well as catch basin or manhole size and type.

b) Include flow direction arrows on all storm drain pipes.

c) Label pipe size, length, material and slope in plan or profile.

d) Include horizontal and vertical datum and benchmark information on each plan and/or profile sheet.

e) Show spot elevations of pavement in parking lots, and runoff flow direction arrows.

f) Show roof leaders and footings drains connecting into conveyance system.

g) Show all stub-out locations for future connections.

h) Show location of rockeries and include section details for rockeries in grading or street improvement plans.

i) Show and label 25-year hydraulic grade line.

j) Show and label the following for all stormwater facilities:

1. At least two cross-sections through detention pond. One cross-section shall show the control structure.
2. Location and detail of emergency overflows and spillways.
3. Invert elevations of all pipes, inlets, tanks, vaults and spot elevations of the pond bottom. Call out pond volume and dimensions, and design surface elevation.
4. Plan and section views and details of all rock protection and energy dissipaters.
5. Section and plan view on restrictor/control structure; detailed, including size and elevation of orifices.

6. Show length, width, and bottom width dimensions for all bio-filtration and water quality swales and stormwater conveyance swales. Include sectional view, showing side slopes and design depth of flow.
7. Include seeding material information.

k) Submit two (2) copies of the drainage TIR in accordance with the King County Surface Water Design Manual, Section 2.3.1.1.

7. LANDSCAPING PLAN

The development of landscaping and erosion control is to conform to the basic concepts and principles set forth in the City of Woodinville Zoning Code and Standards. A copy of the Zoning Code is available for review from the Planning Department.

The landscaping plan shall include street trees required as part of WMC 21.16.050 Section 7, Landscaping, Street Frontages. It should include the following information:

a) Location, size, and species of trees to be planted as required by WMC 2.24.070, 2.24.080, 2.24.090, 2.24.100, and 2.24.110.

b) Description and detail showing site preparation, installation, and maintenance measures.

c) Timeline for site preparation, installation, and maintenance of landscaping (including street trees).

d) Cost estimate for the purchase, installation, and maintenance of landscaping (including street trees).

e) The description and location of all underground and overhead utilities within the right-of-way or near proposed trees.

f) Design guidelines: See Woodinville General Business Zone Design Guidelines Section V, Landscape and Site Design, and the Woodinville Design Principles.

g) Details: Construction and planting details shall be included on the site plan. See Woodinville Standard Details 341 and 342.

h) Construction notes describing the required soil materials and planting preparation shall be included on the landscaping plan.

i) Show all off-site trees (private and public) which could be adversely affected by the proposed activity on the grading, erosion control, and site plans (WMC 21.16.140 and 21.16.160).

j) Show surveyed locations of perimeters of groves of significant trees and individual significant trees to be preserved on the grading, erosion control and site plans (WMC 21.16.140 and 21.16.160).

8. COMPOSITE UTILITY PLAN

Include a composite utility plan sheet showing existing utilities (half tone) and all new utilities. Scale should be 1" = 50'. The composite utility plan shall show all underground utilities and all associated surface improvements that include the locations of the sewer and storm drain laterals, water meters, fire hydrants, street lighting standards, traffic signal poles, mail boxes, transformers, telephone risers, utility vaults, etc. to establish clearances. Underground utilities of concern include sewer, storm drain, water, power, cable TV, telephone, street lighting, traffic signal wiring, gas, and overhead electric/telephone/cable facilities.

9. TRAFFIC CONTROL PLAN

The applicant shall submit a proposed Traffic Control Plan for construction to the Public Works Director for review and approval prior to initiating the work. The Traffic Control Plan often will be part of an approved Right-of-Way Use Permit and shall be coordinated with the Public Works Department and the Permit Center.

All traffic control devices, signing, striping and other pavement delineation shall be in accordance with the most current version of the *Manual on Uniform Traffic Control Devices* (MUTCD).

Standard Details 100 through 112 show typical lane configurations.

1-2.3 Drawings of Record (Construction Corrected Record)

Prior to the final acceptance of any site work, the applicant shall furnish the Public Works Director two neatly and legibly marked sets of full-size (Xerox type) photo static Mylar drawings of the approved construction plans showing any and all changes in the final locations of all items within the public right-of-way and public access easements of work including, but not limited to, curb and gutter, storm drain lines, water lines, sewer lines, catch basins, manholes, fire hydrants, valves, street trees, and new and existing utilities and their appurtenances included in the work. In addition the construction plans must show all storm, sanitary sewer, and potable water system work on private property including, but not limited to, storm drain lines, water lines, sewer lines, catch basins, manholes, fire hydrants, valves, clean outs, water quality systems, storm detention/retention systems, and their appurtenances included in the work.

Marking of the drawings shall accurately represent all changes, both vertical and horizontal, as recorded at the time the material and equipment are installed. Include the words "Drawings of Record" with the current date on each sheet of the plans.

A computer file of the drawings of record (construction corrected record) shall be submitted in conjunction with the mylar drawings. The computer file shall be capable of being imported to AutoCAD (check with City for current version). Please refer to Section 1-2.2.1 of these Standards for information on plan format.

Drawings of Record shall be required for private and public construction in accordance with the following:

Private Development (submit to Permits Center)

1) *Subdivisions, Short Subdivisions, and Utilities Extensions* – Final acceptance of the improvements within the public right-of-way will be withheld until after the Drawings of Record have been submitted and approved.

2) *Commercial* – Final acceptance of the improvements within the public right-of-way and the Certificate of Occupancy will be withheld until the Drawings of Record have been submitted and approved.

Public Works Projects (submit to Public Works Department)

Drawings of Record shall be considered an item on the contractor's punch list. Until all items on the punch list are completed, the project will not be sent to the City Council for approval. Final acceptance and payment will be withheld until the Drawings of Record are submitted and approved.

1-3. GRADING, CONSTRUCTION, AND LAND ALTERATION

Design for all public improvement projects shall comply with the following:

1) City of Woodinville Ordinance No. 58 (See WMC 15.39.010) – Requiring all utility extensions to be underground.

2) City of Woodinville Ordinance No. 68 (See WMC 15.42) – Requiring a permit that may prescribe conditions for the issuance thereof, and setting fees for the underground utilities, paving, sidewalks, curb and gutters, parking, and landscaping, etc., by private individuals, contractors, corporations, and/or developers on public and/or private property.

3) All local, state, and federal regulations.

No grading shall be steeper than 3:1, unless approved by the Public Works Director and supported by a geotechnical report prepared, sealed, and signed by a licensed Professional Engineer certifying that a steeper slope will not pose a landslide or erosion hazard.

1-4. STREETS AND RELATED WORK

1-4.1 General Requirements

All work performed in the design and preparation of plans for new, or improvements to, City streets and all appurtenances, whether public or private, shall be the responsibility of the applicant/contractor and done to the satisfaction of the Woodinville Public Works Director in accordance with the plans and specifications approved by the City for the work.

No permits will be issued to start work until plans for that work are approved and necessary bonds have been provided. Any revisions to the approved plans shall first be reviewed by the Public Works Department and then submitted for approval to the City of Woodinville Permit Center before being implemented. A set of as-built (construction corrected record) drawings (mylars) will be required at the completion of the project and prior to final acceptance of the work.

City of Woodinville Ordinances, Comprehensive Plan, and applicable portions of the Standards, establish policy for the installation of street improvements. Specific requirements may be reviewed with the applicant at a scheduled Technical Review Committee (TRC) meeting or will be determined at the time of permit application and/or issuance.

1-4.2 Street Classification and Geometrics

1-4.2.1 Street Classification

City of Woodinville roadways are classified in the City of Woodinville Comprehensive Plan. Criteria for minimum right-of-way, roadway widths and other geometrics is listed for each classification in the Standard Details 100 through 112. Additional right-of-way and traffic lanes may be required to accommodate turning movements at intersections and as determined by the Transportation Impact Analysis.

1-4.2.2 Street Layout

The overall goal of street placement in the City is as stated in the Comprehensive Plan (GOAL T-10): To provide safe, convenient, and comfortable neighborhood access and circulation properly integrated with the city-wide transportation system.

To accomplish that goal, street layouts should be in accordance with the following Comprehensive Plan policies:

> T-10.1 Identify through the development approval process the impacts of developments on existing transportation systems and have the developer mitigate such impacts by participating in improving local circulation problems

and providing the missing roadway portions identified in the applicable local circulation plan.

T-10.2 Where there is an identified need, dedicate new local access streets or missing sections of existing ones to be provided on-site as part of the permit for development. Require circulation improvements to include pedestrians, equestrians, and bicycling mobility, where appropriate.

T-10.3 Ensure convenient access to residential neighborhoods, employment and retail centers, and major community and government facilities from arterial streets. Development approval should:

1) Require that all property in the city be conveniently accessible from streets, walkways, or trails, subject to environmental, traffic, and safety limitations;
2) Maintain continuity of the street pattern by avoiding street system gaps, half streets, and dead-end streets not having turnaround provisions; and
3) Avoid the creation of excessively large blocks and long local access residential streets, as defined in the City's Subdivision Ordinance.

T-10.4 Emphasize design of the arterial street system to minimize the potential for external traffic to cut-through neighborhoods.

T-10.5 Design residential neighborhood streets to discourage cut-through traffic movements; traffic control and design measures used for this purpose should be consistent with the city's traffic engineering and design standards.

T-10.6 Evaluate impacts on neighborhoods when proposing to extend a neighborhood's local street to serve adjacent new development.

T-10.7 Encourage traffic-calming (speed reduction) features in residential neighborhoods. The City discourages the use of barriers across access points for subdivisions (see Appendix A to these Design Standards).

T-10.8 Site all residential development facing away from arterials and collectors, and onto internal access roads whenever feasible.

Street layouts for new developments shall take into consideration the following:

1) The arrangement of streets in a subdivision shall either:

   a) Provide for the continuation or appropriate projection of existing streets in surrounding areas; or,
   b) Conform to a plan for the neighborhood approved by the Public Works Director to meet a particular situation where topography or other conditions make continuance or conformance to existing streets undesirable.

2) Where a subdivision abuts or contains an existing or proposed arterial street, the Public Works Director may require the following: a) marginal access streets, b) reverse frontage lots with screen planting contained in a non-access reservation along the rear property line, c) deep lots with rear service alleys, or d) other treatment as may be necessary for adequate protection of residential properties and to afford separation of through and local traffic.

3) Non-arterial streets shall be laid out and designed in a manner that discourages their use by through traffic.

4) Easements controlling access to streets shall be prohibited except where the control is definitely placed with the City under conditions approved by the Public Works Director.

5) A tangent at least 100' long is required between reverse horizontal curves on arterial and collector streets, and a tangent of 50' for local streets.

6) Street intersections with centerline offsets of less than 300' for arterials and collectors and 125' for local streets shall not be allowed unless specifically approved by the Public Works Director.

7) Streets shall be laid out so as to intersect within 5° of perpendicular.

8) Property lines at street intersections shall be rounded with a radius of 25', or of a greater radius where the Public Works Director may deem it necessary. The Public Works Director may permit comparable cutoffs or chords in place of rounded corners.

9) Street right-of-way widths shall be as shown in the Standard Details, or as approved by the Public Works Director.

10) New residential streets may require traffic calming measures as determined by the Public Works Director. Traffic calming measures may include speed humps, "neck-downs", traffic circles, and bulbs which can be incorporated into new subdivision design as determined by the Public Works Director.

1-4.2.3 Block Layout

1) Block lengths shall not exceed 1,320' and each block shall be a minimum of 500' long. Modification of these requirements by the Public Works Director may be approved in areas with topographic limitations and in multiple family residential, commercial, and industrial developments.

2) Cross-block lengths shall not be less than 200' to provide for two rows of lots with a utility easement, except that the Public Works Director may approve a single row of lots where the lots abut a major arterial or collector street, a drainage

course, a railroad right-of-way or a single row of lots in an abutting subdivision of record.

3) Where blocks are longer than 660' long, and where access to school, park, or shopping is considered necessary, a pedestrian walk with a wheelchair ramp approximately mid-block, with a minimum right-of-way width of 10', may be required by the Public Works Director with surfacing, fencing, and barriers.

4) Cross-connecting pedestrian and or bicycle paths shall be required between cul-de-sacs and adjacent streets to provide pedestrian connectivity, as determined by the Public Works and Parks and Planning Departments.

1-4.2.4 Horizontal and Vertical Street Alignment

Alignment of streets within the City shall be in conformance with the guidelines of the American Association of State Highway and Transportation Officials (AASHTO) *Policy on Geometric Design of Highways and Streets* and the Washington State Department of Transportation *Design Manual.* The Public Works Director shall approve final project geometric requirements.

1-4.2.5 Street Grades

Street grades shall conform to the AASHTO Policy on Geometric Design of Highways and Streets. Street grades shall be as level as is consistent with the surrounding terrain. Minimum tangent street grades shall be 0.5% along the crown line and curb. Maximum street grades shall be as follows:

Type of Street	Maximum Grade
Private Street	
Residential	15
Commercial	10
Residential Street	15
Collector	
Residential	12
Commercial	10
Minor Arterial	10
Principal Arterial	10

1-4.2.6 Sight Distance

Providing adequate sight distance from a street or driveway is of utmost importance for ensuring safe street and driveway operation. Intersection sight distances shall be evaluated based upon the most current adopted edition of the AASHTO *Policy on the Geometric Design of Highways and Streets.* Sight distance requirements for each approach shall be based upon the criteria for stopping site distance for the 85-

percentile speed. The posted speed limit plus 8 mph may be used if actual speed data is not available.

Standard Detail 316 shows the sight distance triangle. The area within this triangle shall be subject to restrictions necessary to maintain a clear view on the intersection approaches. Driveways shall also observe the sight triangle restrictions, including landscaping and placement of view obstructions.

Other factors such as vertical and horizontal curves and roadway grades also shall be taken into account. Such factors may allow necessary modification to the intersection sight distance requirements.

Sight distance shall be measured using the methods described in the AASHTO "Policy Manual" from a point on the minor road pavement (or nearest traffic lane if parking is permitted) and measured from a height of eye at 3.50' on the minor road to height of object .50' on the major road.

The vertical clearance area within the sight distance triangle shall be free from obstructions to a motor vehicle operator's view between a height of 3' and 10' above the existing surface of the street (WMC 21.12.200).

1-4.2.7 Intersections

Every intersection shall be designed to accommodate the design vehicle appropriate for the highest classified street forming the intersection. All elements of the intersection, including turning lanes and channelizing islands, shall be designed so that a design vehicle will not encroach onto curbs, sidewalks, traffic control devices, channelizing islands, center divisional medians, or into the travel lanes of opposing flow traffic.

1-4.2.8 Curb Return Radii

For the intersection of two local streets, the minimum allowable curb radius shall be 25', which is to be measured from the radius point to the face of curb. For the intersection of a local street with any collector or arterial, the minimum radius shall be 30'.

On streets with bus and truck flows, radii of 40' or more shall be provided. Radii of 40' or more should be designed to fit the paths of appropriate design vehicles.

On all other street intersections, the minimum allowable radii shall be 30'.

Larger radii may also be required where speed reductions would cause delays to emergency response vehicles.

1-4.2.9 Cul-de-Sacs, Turn Arounds

Cul-de-sacs shall be provided at all permanent street ends, and/or on any temporary dead-end location when the length of the street is more than 150' in length. Cul-de-sacs shall be per Standard Detail No. 314. Cul-de-sacs shall not be longer than 500', unless written approval is granted by the Fire Marshall and the Public Works Director. Street ends serving fewer than three lots, and less than 300' long, do not require a turnaround.

On dead-end streets, where the street is less than 150' long, the required turnaround area may be a hammerhead type of design subject to the review and approval of the Fire Marshal and Public Works Director.

1-4.2.10 Private Streets

Community street requirements are usually best served by public streets, owned and maintained by the City. However, private streets may be appropriate for some local access and commercial streets. Usually these are minor residential or commercial access streets.

1) Private streets may be approved only when they:
   a) Are permanently established by easement or public right-of-way providing legal access to each affected lot, dwelling unit, or business, and
   b) Are sufficient to accommodate the required improvements, and
   c) Include provision for future use by adjacent property owners when appropriate, and
   d) Are built to City Standards, and
   e) Are accessible at all times for emergency and public vehicle use, and
   f) Do not obstruct, or are not part of, the present or future public neighborhood circulation plan as contained in the City's Transportation Plan, Comprehensive Plan, Capitol Improvement Program, or other such document, and
   g) Are not going to result in land-locking of present or future parcels, and
   h) Are not needed as public roads to meet the minimum street spacing requirements of these standards, and
   i) Are designed to serve a maximum potential of four residential lots or dwelling units or two commercial lots or buildings when the entire length of the private road and all adjacent parcels are considered. The maximum potential is the total number of lots, dwelling units, or commercial buildings that could possibly be served by the street when physical barriers, zoning, or other legal constraints are considered, and
   j) Are maintained by a legally responsible owner or homeowners association or other legal entity made up of all benefited property owners, and
   k) Is clearly described on the long plat, short plat, or other development authorization document, and
   l) Is clearly signed at the street entrance as a private street.

The City of Woodinville will not accept private streets for maintenance as public streets until such streets are brought into conformance with current City street standards and the right-of-way is dedicated to the City.

The City of Woodinville will not accept private streets within short plats when the street providing access to the plat is currently private, and the street already has the potential to serve more than the number of lots, dwelling units, or commercial buildings specified in these standards. Proposed short plats on properties to which the access is proposed over private streets that do not meet these standards shall be denied.

1-4.2.11 Structural Pavement Section

Structural sections and street appurtenances shall be in accordance with Woodinville Standard Details 100 through 112. The pavement sections shown are allowable minimums only. A geotechnical study and pavement analysis and recommendation will normally be required for any proposed new road construction, widening of existing streets, or major repair and overlay work. The applicant shall be responsible for providing such reports, prepared by a Professional Engineer licensed in the state of Washington, for review and approval by the Public Works Director. Modifications to the minimum road structural sections may be required to address site-specific soil conditions, drainage considerations, and vehicle loads. Where higher than normal truck traffic is projected, the applicant's traffic and geotechnical engineers shall evaluate the adequacy of the proposed section and recommend any additional specific measures necessary to provide a minimum 20-year design life for the new pavement section. The Public Works Director may require the final lift of asphalt to be bonded for and delayed for up to one year due to weather and other considerations.

1-4.3 Non-Motorized Travel Facilities

The City has a goal to promote non-motorized travel and ensure its safety, convenience, and comfort (Comprehensive Plan Goal T-6). To reach that goal, the Comprehensive Plan states several policies, including:

> T-6.8: Incorporate the role of non-motorized travel modes as a viable and legitimate element of the overall transportation system. Transportation projects should accommodate the needs of non-motorized transportation by incorporating a network of facilities:
> a) Within the road right-of-way;
> b) Within an enhanced trail network; and
> c) As part of design and review of development features which can improve non-motorized access and safety.

T-6.11: Ensure that development addresses non-motorized transportation in its site planning.

From T-2.8: Require developments to incorporate pedestrian supportive measures during the development approval process, by:

a) Providing secure and attractive pedestrian spaces;
b) Providing adequate sidewalks, bikeways, pathways, and crosswalks;
c) Preserving the connectivity of the pedestrian, bicycle, and street system.

1-4.3.1 Bike Lanes

Exact locations of bike lanes with respect to sidewalks and road lanes will be determined on a project-specific basis. The Public Works Department will coordinate with the Planning Department to determine final locations, widths, and related requirements. If the required bike lane will not fit within the existing right-of-way, then the applicant shall obtain, at the applicant's cost, and dedicate to the City the additional right-of-way and easements necessary. All bicycle facilities shall conform to WSDOT Standards for bike lanes, trails, and paths. Principal arterials, minor arterials, and collectors, when required, shall include a Class I bike lane with a minimum width of 5'.

1-4.3.2 Sidewalks and Trails

Exact locations of sidewalks and trails will be determined on a project-specific basis. The Public Works Department will coordinate with the Planning Department to determine final locations, widths, and related locations. If the required sidewalk or trail will not fit within the existing right-of-way, then the applicant shall obtain, at the applicant's cost, and dedicate to the City the additional right-of-way necessary.

1) Pedestrian and pathway signing will be provided in accordance with the Manual of Uniform Traffic Control Devices, and the Washington State Department of Transportation Pedestrian Facilities Guidebook.

2) Pedestrian and pathway lighting levels and luminaires will be in accordance with the Illumination Engineering Society of North America (IES) Roadway Lighting Manual.

1-4.4 Fire Department Access

As required by the Fire Marshall, every building constructed shall be accessible to the Fire Department, both during and after construction, by way of fire apparatus access roadways approved by the Fire Department. A fire access roadway shall have at least 20 ' of unobstructed width, shall have adequate roadway turning radius, and be capable of supporting the imposed loads of fire apparatus.

The minimum allowable vertical clearance shall be 13' 6".

All required fire access roadways must be in service prior to commencement of combustible construction.

The maximum allowable grade on any fire lanes, fire access roads, fire access easements, and fire access within subdivisions shall be 15% per the City of Woodinville amendments to the UFC. An Application for Variance may be submitted for review and approval by the City Fire Marshall and the Public Works Director.

The required 20' of fire access roadway shall consist of a paved surface. The type, location, and width of the access roadway surfacing is subject to approval of the Fire Marshal and Public Works Director. The applicant's Soils Engineer shall verify the adequacy of the proposed pavement section for access to fire trucks.

1-4.5 Utilities

1-4.5.1 General

Utilities to be located within existing and proposed City rights-of-way shall be constructed in accordance with current utility franchise agreements and/or current permit procedure, and in compliance with these Standards. In their use of the right-of-way, utilities will be given consideration in concert with the traffic carrying requirements of the road which are, namely, to provide safe, efficient, and convenient passage for motor vehicles, pedestrians, and other transportation uses. Aesthetics shall be a consideration. As a matter of policy, undergrounding of new electric and telephone utilities will be required. Also, utilities are subject to City policies relating to drainage, erosion/sedimentation control, and sensitive areas as set forth in City codes and ordinances, and Section 5, Storm Drainage, of these Standards.

All permits for new placement and replacement of existing utility poles and other utility structures above grade shall be accompanied by written certification from a Professional Engineer or from an agent authorized by the utility to certify that the installations conform to these Standards and that the proposed work is in conformity with sound engineering principles relating to highway safety.

Requests for deviations from these Standards will be processed in accordance with the City's variance procedure as referenced in Section 1-1.8.

1-4.5.2 Joint Trenching

Recognizing that trenching and excavation within public rights-of-way can significantly degrade the quality and longevity of street surfacings and seriously inconvenience the public, all public and private utilities shall share in the use of their excavations and trenches within public rights-of-way whenever feasible.

In the event that the City, a telecommunications carrier, or a public utility desires to share in an excavation, it shall provide a written request to do so. Joint use of excavations shall be subject to the following conditions:

1) Such joint use shall not unreasonably delay the work of the party causing the excavation to be made.

2) A utility owner or agency desiring to share in an excavation may be required to pay the fair and reasonable pro-rata cost of said excavation. Such joint use shall be arranged and accomplished on terms and conditions satisfactory to both parties.

3) Either party may deny such request for safety reasons.

1-4.5.3 Standard Utility Locations Within Public Right-of-Way

Utilities within the right-of-way on new roads or on roads where existing topography, utilities, or storm drains are not in conflict, shall be located as shown on Standard Detail 302 and as indicated below. Where existing utilities or storm drains are in place, new utilities shall conform to these Standards as nearly as practicable, and yet be compatible with the existing installations. Above-ground utilities located within intersections shall be placed so as to avoid conflict with placement of curb ramps.

1) Water Lines:
   a) Location: 6' north or east of street centerline;
   b) Depth: 48" minimum cover from finished grade.

2) Individual water service lines shall:
   a) Be placed with minimum 36" cover from finished grade;
   b) Use road right-of-way only as necessary to make service connections;
   c) Connections shall be as close to 90° from street centerline as practical;
   d) Water meter boxes, when placed or replaced, shall be located outside the right-of-way, on the right-of-way line immediately adjacent to the property being served, unless otherwise approved by the Public Works Director. Meter box locations within the right-of-way may be approved by the Public Works Director based on site conditions which make routine service access difficult or impractical.

3) Sanitary Sewer:
   a) Location: 6' south or west of centerline;
   b) Depth: 36" minimum cover from finished grade;
   c) Sanitary and water lines shall be separated in accordance with good engineering practice such as the Criteria for Sewage Work Design, Washington State Department of Ecology, latest edition.

4) Electric Utilities, Power, Gas, Telephone, Cable TV:
   a) Location: within utility easement adjacent to right-of-way;
   b) Depth: 36" minimum cover, either side of road, at plan location and depth compatible with other utilities and storm drains.

5) Utility Poles:

Every replacement of existing utility poles above grade shall conform to the following:

a) Utility poles or other obstacles placed within the right-of-way shall be as far back from the traveled way or auxiliary lane as practicable.
   i) On shoulder type roads, poles or obstacles shall be located at the back of ditches and a minimum of 10' from the edge of the traveled way, unless protected by concrete barrier, suitable impact attenuating device or placed more than 3.5' behind the face of a guardrail.
   ii) On vertical curb type roads with a speed limit of 40 mph, poles shall be placed clear of sidewalks and at least 2' from the face of the curb. On road with a speed limit of 40 mph or greater, poles and obstacles shall be placed clear of sidewalks and 10' from face of curb.

b) Notwithstanding the other provisions regarding pole locations described in these standards, no poles shall be located so that it poses a hazard to the general public. Utilities shall place and replace poles with primary consideration given to public safety.

c) Deviations from these pole and obstacle clearance criteria may be allowed by an approved variance when justified by a suitable engineering study considering traffic safety. Only the utility owner may request a variance from pole and obstacle clearance criteria. Up to three contiguous damaged or weakened poles may be replaced at existing locations under permit in accordance with emergency procedures. Sequential permits resulting in continuous replacement of a pole line shall not be allowed. A pole or other obstacle which incurs repeated damage from errant vehicles shall be relocated or protected.

d) Locations of poles shall also be compatible with driveways, intersections, and other road features (i.e., they shall not interfere with sight distances, road signing, traffic signals, culverts, etc.). To the extent possible, utilities shall share facilities so that a minimum number of poles is needed.

e) Notwithstanding other provisions, underground systems shall be located at least 5' away from road centerline and where they will not otherwise disturb existing survey monumentation.

1-4.6 Driveways

1-4.6.1 General

1) Encroachments on public property are prohibited. City street rights-of-way may not be used for private residential or commercial purposes. A permit for the construction of driveway approaches shall not be issued unless vehicles to be served or serviced can be parked entirely within the private property lines.

2) The Public Works Director shall have the authority to restrict the number, size, and location of access driveways.

3) In areas where the volume of on-street parking is critical to the City, additional off-street parking space(s) will be required to replace all on-street spaces eliminated by any driveway(s).

4) No driveway approach shall be permitted to encompass any municipal facility (fire hydrant, signal pole, signal cabinet, etc.). Permit conditions may require the applicant to relocate such municipal facilities, including any within the limits of a curb return.

5) The Public Works Director may require joint use of driveways by more than one property.

6) Driveways directly giving access onto arterials may be denied if alternate access is available.

7) Permits for new driveways shall require all abandoned driveway areas on the same frontage shall be removed and the curbing and sidewalk, or shoulder and ditch section, shall be properly restored.

8) Maintenance of driveway approaches shall be the responsibility of the owner whose property they serve.

9) For driveways crossing an open ditch section, culverts shall be adequately sized to carry anticipated stormwater flows and in no case be less than 12" in diameter. The property owner making the installation shall be responsible for determining proper pipe size. The City may require the owner to verify the adequacy of pipe size by preparing a drainage study and report.

10) For design speeds less than 35 mph, driveways must be a minimum of 125' away from an adjacent intersection. For design speeds between 36-45 mph, driveways must be a minimum of 250' away from an adjacent intersection.

1-4.*6.2* *Residential Driveways*

1) General
   a) A single driveway can serve:
      i) A maximum of two lots with one dwelling unit on each lot; or
      ii) A maximum of two dwelling units, as defined in the UBC, on a single lot.

2) Width:
   a) Each single ownership shall be entitled to one 14' wide driveway approach.
   b) Where a driveway approach in excess of 14' is requested for a single ownership, the maximum approach width which the Public Works Director may approve are as follows:

Maximum Width of Residential Driveways		
Frontage	**One Driveway Approach**	**Two Driveway Approaches**
Under 30'	50% of frontage	Not allowed
30 to 60'	20'	Not allowed
60 to 80'	30'	22'
Over 80'	35'	30'

c) There must be at least 20' between driveways serving any one property frontage.

d) No driveway approach, including end slopes, shall be allowed within 5' of the side property line, unless a written request is made to and approved by the Public Works Director, and the owner of the adjacent property is a co-signer of the driveway permit.

e) In cases where driveway approaches are constructed on corner lots, no driveway approach, including side slopes, shall be constructed closer than 4' from the end of any curb return at the curb line.

3) Grade:

a) The maximum allowable grade for a residential driveway is 10%.

b) Grades up to 15% may be allowed subject to advance administrative approval of the Fire Marshal and Public Works Director. Grade changes that exceed 8% shall require vertical curves to connect tangents.

1-4.6.3 Commercial Driveways

1) General

a) Each lot shall be entitled to one access point.

b) Access driveways for parking areas shall be located so as to cause the least possible conflict with vehicular and pedestrian traffic on public rights-of-way.

c) For commercial or industrial driveways with heavy traffic volumes or significant numbers of trucks, the City may require construction of the access as a private road intersection. This requirement will be based on traffic engineering analysis submitted by the applicant that considers, among other factors, intersection spacing, sight distance, and traffic volumes.

d) Private road intersection type driveway openings requested by the applicant will be considered in lieu of conventional driveways in commercial areas when criteria 1 through 4 below are met. Meeting the criteria is not a guarantee that an intersection type driveway will be allowed.

i) Projected driveway usage is greater than 1,000 vehicles per day;

ii) The opening is at least 160' from any other street intersection;
iii) The opening is at least 160' from any other driveway on the property frontage under control of the applicant;
iv) A minimum 100' storage area is provided between the curb line on the street and any turning or parking maneuvers within the development;
v) Where driveways intersect with state route rights-of-way, the applicant shall also obtain approval from the WSDOT Access Management Department.

2) Width:
   a) The minimum width of a commercial driveway shall be 20'.
   b) Where a driveway approach in excess of 20' is requested, the maximum approach widths which the Public Works Director may approve are as follows:

Maximum Width of Commercial Driveways

Street Posted Speed (mph)	**Driveway Maximum Width**[a] (feet)
25	30
26-45	35
Over 45	40

a. Dimension (1) on Standard Details 322, 323, and 324.

3) Grade:
   a) The maximum grade for a commercial driveway is 8%.

   b) Grades up to 15% may be allowed subject to the approval of the Fire Marshal and Public Works Director.

   c) Vertical curves shall be used for smooth transitions at grade changes that exceed 6%, excluding the tie to the roadway.

4) Spacing:
   a) The minimum spacing for commercial driveways is as shown below. Deviations from the minimum spacing requirements must be approved in writing by the Public Works Director. When allowed, commercial driveways located closer than 100' from the approach to a principal or minor arterial intersection shall be signed and marked "Right Turn Only" unless otherwise approved by the Public Works Director.

Minimum Driveway Spacing as a Multiple of Posted Speed (in feet)			
Street Functional Classification	**Minimum Use[1]**	**Minor Generator[2]**	**Major Generator[3]**
Principal Arterial	4–5	7–8	9–10
Minor Arterial	3–4	5–6	7–8
Commercial Collector	2–3	4–5	5–6

1. Fewer than 50 vehicle trips per day or 5 trips in the peak hour (two-way total).
2. About 51 to 5,000 vehicle trips per day or fewer than 500 trips in the peak hour (two-way total).
3. Over 5,000 vehicle trips per day or over 500 trips in the peak hour (two-way total).

1-4.6.4 Driveways Within Areas of Limited Street Improvements

1) Where standard gutters and curbs have not been installed, the apron length shall be measured along the property line and there shall be not less than 20 ' of frontage between driveway approaches serving any one property. Permits shall not be issued for any surface improvement or paving on the street right-of-way between driveway approaches unless a concrete curb or other physical obstruction of a design satisfactory to the Public Works Director is constructed and maintained by the applicant along his property line. The entrance and exit of vehicles to and from applicant's property will be restricted to the established driveway approaches. Pursuant to the permit conditions, the applicant may surface the driveway approaches or other areas within the right-of-way, extending the same type of paving used on the applicant's premises so that it merges with the street pavement, provided the applicant's paving is adequate and suitable for the traffic to be carried. Such extended paving between the property line and the street pavement shall be to established grade or other slope as designed by the Project Engineer and approved by the Public Works Director to provide for proper runoff.

2) Such paving between the property line and the street pavement may meet the street pavement at a point ahead of the curb opening in order to provide for safe deceleration of vehicles turning into the applicant's premises. If applicant's paving is extended beyond the property line into a street right-of-way at an intersection or crossroad, the Public Works Director may require the applicant to construct a suitable traffic island or curb to provide for the protection of such municipal facilities as may be necessary.

1-4.6.5 City-Required Reconstruction of Approaches

1) Reconstruction:
   a) All driveway approaches heretofore constructed or installed and now in use, which are deemed by the City Council as exceeding the allowable width per these Standards, shall be reconstructed by the owners of the property served by such approaches to conform to the provisions of this section within three months after notice is given. Should such change not be made within this time period, the street adjacent to such approaches shall be appropriately marked for parking by the Public Works Director so as to conform to the regulated width and number of approaches. In reconstructing and remodeling the driveway approaches to conform to the provisions of this chapter, curbs shall be replaced according to the ordinance of the City and in accordance with the specifications given by the Public Works Director.

2) Removal and Restoration:
   a) When driveway approaches have been heretofore constructed or installed and are no longer in use, the Public Works Director, by order of the City Council, shall notify the owners of the abutting property to restore the curb and sidewalk to conform to the adjacent curb and sidewalk. If the owner fails to obtain a right-of-way invasion permit and complete the work within six months from the date of Notice from the City Council, the Public Works Director shall proceed to restore the curb and the cost of same shall be a lien upon the property until paid, and shall be entered in the lien docket of the City and shall be foreclosed in the same manner as other City improvement liens.

1-4.6.6 Driveway Relocation

As a condition of approval of a right-of-way invasion permit for a relocated driveway, the existing curb depression in the gutter, and the abandoned driveway shall be removed and the curb, gutter, and sidewalk shall be reconstructed to City Standards.

1-4.7 Street Illumination

1-4.7.1 General

Street lighting systems design shall conform to the applicable portions of the WSDOT Traffic Manual and these Standards. The City of Woodinville owns and maintains the street illumination system on arterial streets. Puget Sound Energy (PSE) owns and maintains the street illumination system for the City of Woodinville on collector and residential streets, therefore, any street illumination system elements proposed by the applicant on collector or residential streets shall be supported by PSE.

1) Street lights shall be provided with the development of all new subdivisions and short plats, and for other commercial, industrial or institutional property development.

2) All new street light wiring, conduit and service connections shall be located underground. The applicant will be responsible for providing or obtaining necessary easements for underground power for street lighting systems designed and constructed as part of an approved development permit.

3) Existing street light systems that extend along the frontage of a new development project or within the limits of a roadway improvement project will not be generally required to be brought into conformance with these street lighting standards. If the Public Works Director determines that existing street light systems should be brought into conformance with these requirements due to special circumstances, the applicant will be notified of this requirement during the City's development review process.

4) For all new street light installations, the applicant shall coordinate jointly with Puget Sound Energy and the Public Works Department to prepare a street lighting plan for submittal to and approval by the Public Works Department. The type of installation shall be as set forth in PSE or WSDOT/APWA Standard Specifications and as directed by the City.

5) All new public street light plans, specifications, and calculations shall be prepared by an engineering firm, Puget Sound Energy, or individual, licensed in the state of Washington, capable of performing such work. All new developments shall submit the lighting plan on a separate drawing to the City for review and approval. All street light plans, specifications, and calculations, including pole locations, types, and heights shall be reviewed and approved by the Public Works Director.

6) Street lights located within the public right-of-way shall be supplied by the applicant. The applicant is responsible for the installation of street lights and all accessories necessary to energize the street light system consistent with Standards. If approved, the installation of special luminaires shall be the responsibility of the applicant.

7) Maintenance of the completed lighting system along residential or collector streets is provided by Puget Sound Energy. Maintenance of the completed lighting system along arterial streets is provided by the City.

8) Private lighting systems shall be maintained by the property owner or homeowners association.

9) The applicant shall coordinate with Puget Sound Energy for the availability and location of power sources for new street light systems.

1-4.7.2 Design Standards

1) Illumination Levels.
   a) The light illumination levels shall conform to the levels listed in the table below.

Illumination Standards Average Maintained Horizontal Illumination (foot-candles)				
		Area Class		
Road Class	**Residential**	**Intermediate**	**Industrial**	**Commercial**
Local	0.4	0.65	N/A	N/A
Collector	0.6	0.8	1.0	1.2
Minor Arterial	0.8	1.2	1.4	1.6
Principal Arterial	0.8	1.2	1.4	1.6

* Intersection lighting is required. Street lights shall be placed in accordance with the Standards listed below.

Uniformity Ratio: 6:1 average to minimum for local
4:1 average to minimum for collector
3:1 average to minimum for arterial

Average illumination levels at intersections shall be 1.5 times the illumination required on the more highly illuminated street. Exception: Local residential and collector streets intersecting other local residential and collector streets shall not require 1.5 times the illumination at other intersections, provided that one luminaire is placed at the intersection.

At signalized intersections, all signal poles shall include a street light. Lighting levels at these locations may be higher than the criteria listed above.

2) Luminaires
   a) The following luminaires have been approved for use in the City of Woodinville:

<u>Arterials</u>
GE Lighting Systems M-250 R2
GE Lighting Systems M-400 with cutoff optics
Cooper Concourse III - UCS Series (shoe box)
<u>Commercial Collectors</u>
GE Lighting Systems M-250 R2
GE Lighting Systems M-400 with cutoff optics
<u>Residential Collectors</u>
GE Lighting Systems M-250 R2

GE Lighting Systems M-400 with cutoff optics
Cooper Lighting Dayform Traditionaire
Cooper Lighting Dayform Lexington
Cooper Lighting New Haven
Cooper Lighting Breckenridge
Cooper Lighting Westminster

Residential
GE Lighting Systems M-250 R2
GE Lighting Systems M-400 with cutoff optics
Cooper Lighting Dayform Traditionaire
Cooper Lighting Dayform Lexington
Cooper Lighting New Haven
Cooper Lighting Breckenridge
Cooper Lighting Westminster

b) All luminaires shall have clear lamps.

c) All luminaires shall be high pressure sodium or metal Halide for Arterial Streets only.

400 watt lamp =50,000 initial lamp lumens
250 watt lamp =29,000 initial lamp lumens
200 watt lamp =22,000 initial lamp lumens
150 watt lamp =16,000 initial lamp lumens
100 watt lamp = 9,500 initial lamp lumens

Lamp Dirt Depreciation factor (LDD) = 0.90

Lamp Lumen Depreciation factor (LLD)= 0.85

Combined LDD + LLD = 0.76

3) Light Standards
   a) Light standards shall be located on one side of the roadway only or shall be located opposite each other when placed along both sides of the roadway. Staggered spacing will be allowed upon approval of the Public Works Director where there is an established staggered pattern and it is necessary to continue this pattern, or when site or safety conditions prevent locating luminaires on only one side of the roadway.
   b) In areas where the street width differs from the City Standard, or there are other factors influencing the location of the street lights, the Public Works Director will provide input to the applicant on acceptable options.
   c) The following light standards have been approved for use in the City of Woodinville.

Arterials
Steel luminaire per King County Standards
Whatley Series E35 and E36

Commercial Collectors
Steel luminaire per King County Standards
Whatley Series E35 and E36

Residential Collectors
Steel luminaire per King County Standards
Whatley Series E35 and E36
Ameron Victorian Style V
Whatley Washington Series 405
Whatley Jamestown Series 307
Whatley Providence Series 306

Residential
Steel luminaire per King County Standards
Whatley Series E35 and E36
Ameron Victorian Style V
Whatley Washington Series 405
Whatley Jamestown Series 307
Whatley Providence Series 306

Central Business District
Lumec RD1 pole and luminaire

Special luminaires, which are not consistent with these standards, must be approved in writing by the Public Works Director.

Luminaire mounting heights shall be as shown in the following table.

Recommended Mounting Heights

Number of Lanes	Wattage	Mounting Height
3 to 5	400	35 to 40'
2 to 3	200	30'
2	100	25'
Residential	100	12 to 15'

d. Street light foundations shall be submitted for review and approval by the Public Works Director.

4) Line Loss

Line loss calculations shall show that no more than 5% voltage drop occurs in any circuit. Branch circuits shall serve a minimum of four luminaires.

5) Conductors

The minimum wire size for any illumination circuit shall be No. 6 aluminum. Number 10 wire will be acceptable for the pole and bracket cable within the light standard only.

6) Conduit

Conduits shall be sized to provide 26% maximum fill. A minimum 1-1/2" conduit shall be installed.

1-4.8 Traffic Signals

1) When a proposed street or driveway design interferes with existing traffic signal facilities, traffic signal modification or relocation must be provided.

2) To mitigate the traffic impacts of a development, modification of an existing signal or installation of a new signal may be required.

3) All traffic signal modification designs shall be prepared by a Professional Engineer licensed in the state of Washington experienced in traffic signal design.

4) All signals, whether temporary of permanent, shall be equipped with pre-exemption that is compatible with the equipment used by the fire department (500 Series 3M Opticom).

1-4.9 Curb Ramps

In accordance with State law, curb ramps shall be provided at all pedestrian crossings with curb sections. It is required that when a ramp is constructed giving handicap access to the roadway area, the corresponding ramp at the opposite side of the roadway will also be required. Exact locations of each curb return shown on the project plans will be verified in the field by the City's inspector prior to construction.

1-4.10 Mailboxes

New developments shall include mailboxes of the type, number, and locations determined by the Woodinville Postmaster. The applicant shall provide the Postmaster with two copies of the preliminary project site plans for use in establishing locations, types and numbering of the mailboxes. The Postmaster will

retain one copy and return the other redlined set to the developer for use in preparing final plan.

In the case of new road construction or reconstruction requiring mailboxes to be relocated or rearranged, the applicant shall coordinate through the Woodinville Postmaster for acceptable box locations and to ensure uninterrupted mail service. Approved locations for mailboxes shall be shown on the street construction plans.

For new construction where existing sidewalks are located adjacent to the curb, the sidewalk shall be widened to provide a clear width of not less than 5' from the back of mailbox structure to the back of the sidewalk per Standard Detail 338.

Mail boxes shall be installed per Standard Details 338 and 339. Gang boxes shall be installed per Standard Detail 340.

1-4.11 Rockeries and Rock Walls

Rockeries over 4' in height must be designed by a Structural Engineer licensed in the state of Washington.

Additional geotechnical analysis and recommendations shall be required to permit the use of rockeries over 4' in height.

Surfaces reasonably accessible to pedestrians above and adjacent to rockeries over 30" in height shall be protected by a pedestrian handrail conforming to Section 311.2.3.5 and Table 16-B of the Uniform Building Code (UBC) and to Section 4.11 of these Specifications.

Use of ecology blocks may be approved on a case-by-case basis. All ecology block walls shall be designed by a Structural Engineer licensed in the state of Washington.

A Right-of-Way Permit is required for all rock walls within the public right-of-way. All rockeries exceeding 4' in height on public or private property require a separate building permit.

1-4.12 Pedestrian Hand Railings

Pedestrian hand rails shall be provided where necessary to conform to requirements of the Americans with Disabilities Act (ADA).

Sidewalks, trails and other pedestrian accessible areas which are adjacent to cut or fill slopes steeper than 1-1/2 horizontal to 1 vertical (1-1/2H:1V) with a vertical grade separation of 30" or greater shall be protected with pedestrian hand rails unless a horizontal clearance of 2' is provided to protect pedestrians.

Surfaces reasonably accessible to pedestrians above or adjacent to rockeries or walls in excess of 30 "es in height shall be separated by an approved hand rail system.

1-4.13 Parking Lots

1-4.13.1 Handicap Requirements

Handicap parking stalls shall meet the requirements of Washington State Regulations for Barrier Free Facilities (WAC 51-10), RCW 19.27, State Building Code and RCW 70.92, Public Buildings - Provisions for Aged and Handicapped. Refer to Woodinville Municipal Code; safe, convenient handicap access is required from the street to all buildings on site, in addition to safe, convenient handicap access between buildings. Sidewalks constructed adjacent to City streets/roadways shall provide handicap access, including ramps, landings and handrails as necessary.

1-4.13.2 Illumination

The applicant shall submit separate illumination plans and calculations to the Permit Center for review and approval.

1-4.13.3 Pedestrian Concerns

Pedestrian walkways and sidewalks shall conform to requirements of the WMC.

1-4.13.4 Internal Circulation

Internal vehicle and pedestrian circulation for parking lots shall be approved by the Planning Director and Public Works Director. Parking lot circulation shall allow for access so pedestrians and wheelchairs can easily gain access from public sidewalks and bus stops to building entrances through the use of pedestrian paths which are physically separated from vehicle traffic and maneuvering areas. In shopping center parking lots containing more than 100 spaces, such pedestrian/wheelchair paths shall be a minimum of 5' wide and constructed in a manner that they cannot be used as a holding area for shopping carts.

1-4.13.5 Throat Length Requirements

The throat length is the unobstructed storage length requirement measured from the inside face of curb to the first driveway or parking stall. The minimum throat length shall be 25' for all land uses unless it is determined by the Public Works Director that greater throat length is required, based upon project specific traffic volumes, site conditions, and adjacent roadway classifications.

The Public Works Director may reduce the throat length requirement when multiple driveway entrances are required.

1-5. STORM DRAINAGE

1-5.1 Goals/Design Criteria

Storm drainage design criteria shall be from the latest edition of the *King County Surface Water Design Manual* (KCSWDM) unless otherwise noted below.

1-5.2 Design Requirements

1-5.2.1 Conveyance

See King County Surface Water Design Manual for requirements.

1-5.2.2 Catch Basins

Maximum catch basin spacing will be 300' on arterials and collectors and 500' on all other street classifications. No surface water will cross any roadway to private property.

Catch basins located in "low points" will have a through curb inlet.

1-5.2.3 Detention

See King County Surface Water Design Manual for requirements.

1-5.2.4 Treatment

See King County Surface Water Design Manual for requirements.

1-5.2.5 Pipe Bedding and Trench Compaction

See Standard Plans 470 and 471 for pipe bedding and trench compaction requirements.

1-6. SANITARY SEWER

Sanitary sewer improvements shall be designed in accordance with the rules and guidelines of the Woodinville Water and Sewer District.

1-7. WATER

Water improvements shall be designed in accordance with the rules and guidelines of the Woodinville Water and Sewer District.

City of Woodinville
Transportation Infrastructure Standards and Specifications

PART 2
CONSTRUCTION SPECIFICATIONS

Table of Contents

Section **Page No.**

2-1. GENERAL CONDITIONS 2.1
- 2-1.1 Standards 2.1
- 2-1.2 General Requirements 2.1
- 2-1.3 Preconstruction Meeting 2.1
- 2-1.4 Surveying and Monumentation 2.2
  - 2-1.4.1 Monumentation 2.2
  - 2-1.4.2 Construction Staking and Post-Construction Survey 2.2
- 2-1.5 Control and Inspection of Work 2.3
  - 2-1.5.1 General 2.3
  - 2-1.5.2 Inspection, Materials Sampling, and Testing 2.3
  - 2-1.5.3 Final Inspection of Work 2.4
- 2-1.6 Permits 2.4
- 2-1.7 Legal Relations and Responsibilities 2.4
- 2-1.8 Public Convenience and Safety 2.5
- 2-1.9 Asbestos Control 2.6
- 2-1.10 Utilities 2.6
  - 2-1.10.1 Utility Location 2.6
  - 2-1.10.2 Utility Relocation 2.6
- 2-1.11 Hours of Construction 2.6
- 2-1.12 Traffic Control 2.7
  - 2-1.12.1 General 2.7
  - 2-1.12.2 Detours, Lane and Street Closures 2.7
  - 2-1.12.3 Flaggers, Barricades, and Signs 2.7
- 2-1.13 Fire Department Temporary Access Roads 2.8

2-2. CONSTRUCTION REQUIREMENTS 2.8
- 2-2.1 Asphalt Concrete Pavement and Pavement Patching 2.8
  - 2-2.1.1 Description 2.8
  - 2-2.1.2 Materials 2.9
  - 2-2.1.3 Construction Requirements 2.9
- 2-2.2 Off-Street Parking 2.11
- 2-2.3 Cement Concrete Driveway Approach 2.11
  - 2-2.3.1 Description 2.11
  - 2-2.3.2 Materials 2.11
  - 2-2.3.3 Construction Requirements 2.11
- 2-2.4 Street Illumination 2.12
  - 2-2.4.1 General 2.12
  - 2-2.4.2 Materials 2.12

2-2.4.3 Construction Requirements 2.12
2-2.5 Underground Trenching 2.13
2-2.5.1 Trench Excavation 2.13
2-2.5.2 Trench Backfill 2.15
2-2.5.3 Compaction 2.16
2-2.5.4 Testing 2.16
2-2.5.5 Notification and Inspection 2.16
2-2.5.6 Trenching Longitudinal to Roadway 2.17
2-2.5.7 Trenching Transverse to Roadway 2.17
2-2.5.8 Drain Pipe 2.17
2-2.5.9 Jacking, Auguring, or Tunneling 2.17
2-2.5.10 Pavement Restoration 2.18
2-2.5.11 Final Utility Adjustment 2.18
2-2.6 Cement Concrete Curb and Gutter Sections 2.18
2-2.6.1 Description 2.18
2-2.6.2 Materials 2.19
2-2.6.3 Curing and Protection of Concrete 2.19
2-2.7 Guardrails 2.19
2-2.8 Cement Concrete Sidewalks 2.19
2-2.8.1 Description 2.19
2-2.8.2 Materials 2.20
2-2.8.3 Construction Requirements 2.20
2-2.9 Mailboxes 2.21
2-2.10 Rockeries and Rock Walls 2.21
2-2.10.1 Description 2.21
2-2.10.2 Materials 2.22
2-2.10.3 Construction Requirements 2.22
2-2.11 Pedestrian Hand Railings 2.23
2-2.11.1 Fabrication 2.23
2-2.11.2 Installation 2.23
2-3. MATERIALS 2.24
2-3.1 Controlled Density Fill (CDF) 2.24
2-3.2 Gravel Borrow 2.24
2-3.3 Non-Shrink Cement Sand Grout 2.24
2-3.4 No. 2 Washed Coarse Sand 2.25
2-3.5 Spawning Gravel 2.25
2-3.6 Quarry Rock 2.26

2-1. GENERAL CONDITIONS

2-1.1 Standards

Part 2, Construction Specifications, of the Standards shall apply whenever any work is performed within the public right-of-way in the City of Woodinville, including, but not limited to, work performed by private parties at their own expense under authority granted by ordinance(s) of the City Council. Except where these Standards provide otherwise, design, construction, and materials shall conform to the appropriate standards of the most current edition of the following publications, in this order of precedence:

1) WSDOT/APWA *Standard Specifications for Road, Bridge and Municipal Construction*, hereinafter referred to as the "WSDOT/APWA Standard Specifications".

2) WSDOT/APWA *Standard Plans for Road, Bridge and Municipal Construction*, hereinafter referred to as "WSDOT/APWA Standard Plans".

3) King County Road Standards.

2-1.2 General Requirements

All work performed in the construction of new city streets or the improvement of existing city streets, including all appurtenances funded, whether by a public or private party, shall be the responsibility of the contractor and completed to the satisfaction of the Public Works Director in accordance with the plans and specifications approved by the City for the work.

2-1.3 Preconstruction Meeting

For private developer-funded projects, a preconstruction meeting shall be held at the City prior to any construction work being performed by the contractor. Prior to the preconstruction meeting, the applicant and/or their contractor shall have in their possession construction plans approved by the City, and all required City permits, which may include but not be limited to: right-of-way permits, grading permits, site development permits, and hauling permits necessary to perform the work. The contractor shall also have any and all permits and approvals required by other outside agencies.

The applicant and/or contractor shall schedule the preconstruction meeting at a time that is convenient for the Permit Center Manager. The meeting shall be scheduled a minimum of five (5) days before construction, unless otherwise approved by the Permit Center Manager. The person who will be responsible for completion of the work shall be present during the entire preconstruction meeting.

2-1.4 Surveying and Monumentation

This work shall consist of all the surveying and monumentation required to construct the project as described in the project plans and specifications.

2-1.4.1 Monumentation

Monuments shall be located at all centerline intersections of intersecting streets. Curved streets shall be monumented at PC (point of curvature) and PT (point of tangency) of the curve.

It shall be the responsibility of the contractor to furnish all materials and install monuments and castings in accordance with the drawings and where directed by the Public Works Director. All survey work shall be performed by a Professional Land Surveyor (PLS) licensed in the State of Washington. The monument disk shall be furnished and installed by the contractor in accordance with Standard Detail 336.

It shall be the contractor's responsibility to provide the surveying required to establish and/or perpetuate land corner monumentation required on the project.

All land corner surveying shall conform to the requirements of RCW 58.09. If the contractor's surveyor replaces or restores an existing or obliterated "General Land Office" (GLO) corner(s), it shall be their responsibility to file "Land Corner Records" for these monuments with the County Auditor's Office. When all land corners have been established, replaced or restored and monumented as described herein, the surveyor shall certify this information with a letter to the Public Works Director and transmit copies of any recorded surveys and documents. This certification letter shall include the location of the monumented corner(s) and that all land corner(s) have been monumented as described herein.

The contractor's surveyor shall provide the City with a copy of the recorded survey, survey notes, and a reproducible mylar drawing. If the survey was prepared on CADD, a disk of the drawing shall also be provided to the City.

2-1.4.2 Construction Staking and Post-Construction Survey

Surveying, as required to construct a given project per the approved plans, shall be furnished by the contractor at no expense to the City.

At a minimum, construction survey stakes shall be set at 50' intervals for new curb and gutter construction, for both horizontal and vertical control. The City may require a shorter internal spacing due to specific site characteristics.

All water, storm drain, and sanitary sewer mains which are to be constructed in easements, are to have survey offset stakes set prior to starting work.

Any utility installation within an easement which deviates from the staked line must be left uncovered and resurveyed. If the Public Works Director determines that the

deviation exceeds acceptable limits, the contractor will be required to either a) remove and reconstruct the utility, or b) realign the easement. As-built "construction corrected record" information shall be provided to the City upon completion of the work.

The City reserves the right to check survey points and/or the locations and elevations of new construction. These spot-checks will not change the requirements for normal checking and testing as described elsewhere in these Standards, and do not relieve the contractor of the responsibility of producing a finished product that is in accordance with the contract. If errors are found in the locations and/or elevations of the improvements, then the contractor shall correct these errors, including removing and replacing improvements, and shall pay all expenses incurred by the City, including any re-survey.

2-1.5 Control and Inspection of Work

2-1.5.1 General

All construction of public improvements within the city limits, whether by a private developer, a City-hired contractor, or City forces, shall be done in accordance with the approved plans and specifications for the project and to the satisfaction of the Public Works Director, and in accordance with all appropriate codes and ordinances.

No work may be started until construction plans are approved by the City. Any revision to such plans shall be submitted by the developer's engineer to the Permit Center for approval, prior to performance of the work.

The Public Works Director has, by ordinance, authority to enforce these Standards as well as other referenced or pertinent specifications and will appoint project engineers, assistants and inspectors as necessary to inspect the work for compliance. For inspections required on private property due to issuance of permits by the City, the City retains the right to enter the subject property at reasonable times for purposes of inspection for compliance with permit conditions. The contractor shall provide access for the inspector.

Inspection by the City does not relieve the contractor of his/her obligation to furnish satisfactory material and workmanship.

2-1.5.2 Inspection, Materials Sampling, and Testing

Sampling and testing shall be at a frequency and magnitude described in the WSDOT/ APWA *Standard Specifications* and WSDOT *Construction Manual.*

1. PRIVATE CONTRACTORS

It shall be the responsibility of the applicant to provide test reports certified by a professional engineer licensed in the State of Washington to verify compliance of materials used in the construction of all public improvements. Copies of all test

reports shall be furnished to the Public Works Director. All costs incurred for testing or sampling, as required, shall be the responsibility of the applicant.

2. CITY-HIRED CONTRACTORS

Construction work performed by City contractors shall be inspected by City inspectors. Sampling and testing shall be performed by an independent professional testing laboratory, selected by the City.

3. NOTIFICATION OF INSPECTION

The applicant and/or contractor shall notify the City of inspection needs in a timely manner. A minimum of 24 hours advance notice will be required. Failure to provide adequate advance notification will oblige the City to arrange appropriate sampling and testing after-the-fact, with certification by a qualified private testing laboratory. All costs of such testing and certification shall be borne by the contractor.

2-1.5.3 Final Inspection of Work

All completed public improvements, including all materials, shall be subject to final inspection by the City prior to final acceptance of the work.

Prior to final acceptance, all items as identified by the City as needing additional work shall be completed and re-inspected to the satisfaction of the City.

2-1.6 Permits

It is unlawful for any person to:

- dig up, break, excavate, tunnel, undermine or in any manner break up any street or to make or cause to be made any excavation in or under the surface of any street for any purpose; or to
- place, deposit or leave upon any street any earth or other excavated material obstructing or tending to interfere with the free use of the street

unless such person has first obtained the necessary permit(s) and other approvals.

All permits shall be displayed in a conspicuous place on the job site. It is unlawful for any person to exhibit a permit at or about any project not covered by such permit, or to misrepresent the number of the permit or the date of expiration of the permit.

2-1.7 Legal Relations and Responsibilities

The applicant and/or contractor shall at all times comply with all Federal, State, and local laws and ordinances, and any regulations which in any manner affect the project.

The applicant and/or contractor shall execute an indemnification agreement in a form approved by the City Attorney before any construction may begin.

2-1.8 Public Convenience and Safety

The contractor shall schedule and control his/her work so as to prevent all hazards to public safety, health, and welfare.

The contractor shall conduct his/her operations so as to offer the least possible obstruction and inconvenience to the public, and shall have under construction no greater length or amount of work than he/she can prosecute properly with regard to the rights of the public. The contractor shall not open up sections of the work and leave them unfinished, but shall finish the work as he/she goes insofar as practicable.

1) The contractor shall keep existing roads and streets adjacent to and within the limits of the project open to, and maintained in a good and safe condition for, traffic at all times.

2) The contractor shall repair all damage resulting from his/her operations.

3) Streets shall be maintained clean and free of dirt and debris on a continuous basis. Sweeping with a power pick-up broom is required. Cleaning by water flushing will not be allowed.

4) Pedestrian facilities shall be kept free of obstruction, and shall be maintained continuously unless otherwise approved by the City.

5) On existing streets, two-way traffic shall be maintained at all times unless otherwise approved by the Public Works Director. See also Section 2-1.13 of these Specifications.

6) Construction shall be conducted so as to cause as little inconvenience as possible to abutting property owners.

7) Convenient pedestrian and vehicular access to driveways, houses, and buildings along the line of work shall be maintained at all times. The City may allow the contractor to close driveways for limited times when approval from the building owner has been obtained.

8) Access to mail boxes shall be provided during construction. The contractor shall coordinate with the Postmaster as needed.

9) City-owned infrastructure (i.e., manholes, valve boxes, meters, etc.) shall be accessible at all times.

10) Access compatible with ADA requirements to transit service shall be maintained at all times.

2-1.9 Asbestos Control

The contractor shall refer to Puget Sound Air Pollution Control Authority Guidelines for identification, inspection, reporting, handling, and removal of materials containing asbestos. Asbestos containing material (ACM) may be encountered during a construction project in the form of asbestos cement pipe, pipe insulation, or as insulation in a structure that is being demolished. It can be found in pipe for water and sewer mains, electrical conduits, drainage pipe, and vent pipes, etc. It is imperative that asbestos fiber release be controlled. Citations by regulatory agencies for an asbestos fiber release carry substantial fines.

Only employees certified by the State of Washington as Certified Asbestos Workers may work on ACM during construction, demolition, repair, maintenance, renovation, salvage, or disposal of ACM.

When required by applicable laws and regulations, the contractor shall have all asbestos legally removed from the site and properly disposed of by a state licensed asbestos contractor in accordance with the practices specified by the State of Washington Department of Ecology, the King or Snohomish County Solid Waste Division and all other pertinent State and Federal Regulations. See WAC 296-62-077.

2-1.10 Utilities

Utility providers including telephone, cable TV, gas, water, and sewer districts may operate under agreement with the City and shall be included in the coordination of all planning, installation, operation, and maintenance of improvements.

2-1.10.1 Utility Location

Before beginning any excavation, the contractor shall request location, coordinate construction activity with the utility owners, and provide notice of commencement to all owners of underground facilities through the one number locator service, phone number 1-800-424-5555. If the utilities are not on the "one-call" system, the contractor shall give written notice to each individual utility owner. Such notice shall not be less than two nor more than ten business days before the scheduled date of excavation.

2-1.10.2 Utility Relocation

The Contractor shall coordinate his/her work with utility companies whose facilities need to be relocated as a part of the improvement project.

2-1.11 Hours of Construction

Allowed project hours of construction are 7:00 a.m. to 7:00 p.m., Monday through Friday; and 9:00 a.m. to 5:00 p.m., Saturday. No construction is allowed on

Sundays and legal holidays (City Ordinance 219, WMC 15.03.090). Exceptions may be considered upon written request to the City.

Construction contractors are responsible for notifying subcontractors of the City's work hour restrictions and noise regulations.

Additional restrictions on the allowable hours of construction within public right-of-way may be imposed by the Public Works Director due to specific site issues such as traffic volumes.

2-1.12 Traffic Control

2-1.12.1 General

Traffic control for all projects shall comply with Chapter 6 of the *Manual of Uniform Traffic Control Devices (MUTCD)* and with the approved Traffic Control Plan for the project.

The contractor shall be responsible to plan, furnish, and maintain all required labor, equipment, and materials necessary to protect the public and workers during the course of construction.

All equipment and materials required for traffic control shall be furnished, installed and maintained by the contractor to the satisfaction of the Public Works Director.

2-1.12.2 Detours, Lane and Street Closures

Approval must be received from the Public Works Director in advance for all proposed detours, lane, and street closures. If a closure or detour is not already in the approved Traffic Control Plan, a formal traffic control plan supplement complying with the MUTCD shall be submitted to Public Works for review at least ten working days prior to scheduled closure. Approval by the Public Works Director is required prior to any work proceeding. Written notification shall also be given to the police, fire, postmaster, Metro, Community Transit, Northshore School District, and solid waste provider five days before any detour or lane closure to allow advance planning of travel routes.

All road closures shall require special fabricated signs to notify the public of the closure. These signs shall clearly indicate dates of closure, location, and purpose. Signs shall be posted a minimum of ten days prior to the closure.

Unless an emergency exists, lane closures shall be limited to non-peak hours of traffic.

2-1.12.3 Flaggers, Barricades, and Signs

If any deviation from or additions to the approved Traffic Control Plan is needed, the contractor shall prepare a signing plan supplement showing the required construction

signing, barricades, and flagger(s) for the project and submit the plan(s) to the Public Works Department for review and approval at least ten working days in advance of the time the signing and barricades will be required.

During construction activity at signalized locations, an off-duty, uniformed police officer shall be required at all times when the signal or beacon is turned off and when the traffic signal indicator is countermanded, and at any other time that the Public Works Director determines that a uniformed police officer is necessary for traffic control. Officers are also required for new traffic signal work. A uniformed police officer shall be provided at the expense of the contractor. For information on police officer availability, call the City of Woodinville Police Department at (425) 489-2700.

2-1.13 Fire Department Temporary Access Roads

As required by the Fire Marshall, every building shall be accessible to the Fire Department both during and after construction, by way of a fire apparatus access roadway approved by the Fire Department. The fire apparatus access roadway shall have at least 20' of unobstructed width, shall have adequate roadway turning radius for fire vehicles, and be capable of supporting the imposed loads of fire apparatus.

The minimum allowable vertical clearance shall be 13' 6".

All required fire access roadways must be in service prior to commencement of combustible construction.

Temporary access roads in use during building construction shall be constructed for all weather driving conditions. At no time during the construction of the project should the roadway surface consist primarily of dirt, mud, sand, or other material that, in the opinion of the Fire Marshall, may impair fire fighting or rescue operations. The required 20' width must be maintained so that the driving surface is recognizable day and night and shall not be obstructed in any manner, including parking of vehicles. The Fire Marshall or Public Works Director may stop construction any time the condition of the access road has deteriorated or is not adequate for providing emergency services.

2-2. CONSTRUCTION REQUIREMENTS

2-2.1 Asphalt Concrete Pavement and Pavement Patching

2-2.1.1 Description

This work shall consist of asphalt concrete paving and the patching of various types of pavement cuts, in accordance with Standard Details 101 through 112, 300A, and 300B.

2-2.1.2 Materials

The following materials shall be as defined in the WSDOT/APWA Standard Specifications unless otherwise noted:

1) Paving asphalt – Grade AR-4000W.

2) Asphalt concrete for permanent pavement patch – asphalt concrete Class A.

3) Asphalt for temporary patch – asphalt treated base (ATB).

4) Tack coat – emulsified asphalt grade CSS-1 [Section 9-02.1(6)].

5) Geotextile fabric for pavement reinforcement – needle-punch nonwoven 100% polypropylene products such as "Petromat" or "Supac", as manufactured by Phillips Fiber Corporation, are acceptable. Other products may be submitted by the contractor to the Public Works Director for review and approval as "equal" substitutions.

6) Asphaltic binder for use with geotextile fabric shall conform to the manufacturer's recommendations for the fabric used. Cutback asphalts cannot be used with polypropylene fabrics due to reactions with solvents at high temperatures.

7) Cement concrete pavement patch – 3-day mix (Section 5-05).

2-2.1.3 Construction Requirements

PAVING

Compaction of the subgrade shall be completed prior to the required asphalt work or patching as determined in the WSDOT/APWA Standard Specifications.

Pavement patching shall be scheduled to accommodate the demands of traffic and shall be performed as rapidly as possible to provide maximum safety and convenience to public traffic.

Before the pavement patch is to be constructed the pavement shall be sawcut so that the marginal edges of the patch will form a rectangular shape with straight edges and vertical faces.

When required by the Public Works Director, cold planing along the edge of existing roadways and at interfaces with existing pavements, shall be completed to the widths and depths established in the plans and specifications. The cold planing shall be completed prior to trenching, when feasible, so that remaining pavement patching and overlays can be completed in a uniform manner.

Geotextile fabric materials, when required in the plans and specifications, shall be placed and constructed according to the manufacturer's recommendations. Only

contractors experienced in the placement of the material shall be responsible for placement. A manufacturer's representative shall review with the contractor and the City Inspector the project conditions, proposed placement methods, and equipment to be used.

After the crushed surfacing top (or base) course subgrade has been leveled and compacted, asphalt concrete pavement shall be placed of the class and to the thickness shown on the plans. Asphalt shall be compacted to 91% of maximum density as determined by WSDOT Test Method 705.

[Verify King County pavement marking standards. See Standard Details 350A - 350G.]

TEMPORARY PAVEMENT PATCHING

Temporary asphalt patching shall be required where roadway or walkway is needed for vehicular or pedestrian traffic during the construction period, until permanent pavement and sidewalks can be constructed.

The contractor shall furnish, place and maintain temporary pavement patching, at locations as directed by the City, until such time as a permanent pavement patch can be made. The permanent pavement shall be completed within seven working days of the completion of trenching and road repairs.

Temporary pavement patch shall consist of asphalt treated base (ATB) compacted to at least 90% of maximum density as determined by WSDOT Test Method 705.

In the event that the temporary surface subsides after the initial placement, additional ATB shall be applied to maintain the surface.

CEMENT CONCRETE PAVEMENT PATCHING

Streets which have cement concrete pavements surfaced with asphalt concrete shall be patched as shown on Standard Detail 110. The crushed surfacing shall be 1" thicker than the adjacent crushed surfacing or 6", whichever is greater. After the crushed surfacing top course subgrade for the pavement has been constructed and compacted to line and grade, the cement concrete pavement patch shall be placed and struck off to a thickness of 1" greater than the existing pavement or 6" minimum, whichever is greater.

The top surface of the concrete patch shall match the top surface of the adjacent pavement. Joints shall be placed to match existing.

Through joints and dummy joints shall be placed to match existing. The surface of the concrete patch shall be finished and brushed transversely with a fiber brush to improve bonding with the asphalt overlay. Approved curing compound shall be placed on the finished concrete immediately after finishing.

Asphalt concrete plant mix shall not be placed until three days after the cement concrete base has been placed or otherwise permitted by the City. The asphalt concrete plant mix shall not be placed until the concrete base has received a tack coat of CRS-2 at a rate of 0.12 to 0.20 gal/yd^2. The edges of the existing asphalt and castings shall also be painted with the tack coat. The asphalt concrete pavement shall then be placed, leveled, and compacted to conform to the surface of the existing asphalt pavement. Immediately thereafter, all joints between the new and original asphalt pavement shall be painted with AR4000W CSS-1 asphalt emulsion and covered with dry sand before the asphalt solidifies.

2-2.2 Off-Street Parking

All parking lot construction shall be inspected for conformance to plans for size, layout, drainage control, and structural section.

The minimum acceptable structural section for parking lots shall be 2" of asphalt concrete Class "A" placed over 4" of crushed surfacing top course, or 2" of asphalt concrete Class "A" placed over 2" of asphalt treated base, unless otherwise approved by the Public Works Director. Heavier pavement sections may be required for truck traffic, vehicle storage or as determined by the applicant's soils Engineer due to soil conditions.

Prior to placing any surfacing material on the parking lot, it will be the responsibility of the applicant to provide density test reports of the subgrade certified by a licensed engineer or testing laboratory registered in the State of Washington documenting that the subgrade had been compacted to 95% maximum dry density.

Crushed surfacing top course shall be compacted to 95% maximum dry density. Density testing for asphalt pavement, including the necessity and frequency of core samples, will be determined by the Public Works Director on a case by case basis.

2-2.3 Cement Concrete Driveway Approach

2-2.3.1 Description

This work shall consist of constructing cement concrete driveway approach at the locations shown on the plans and where directed by the Public Works Director, in accordance with Standard Details 322, 323 and 324.

2-2.3.2 Materials

The concrete mix shall be as specified for Class 3000 structural. The slump of the concrete shall not exceed 3".

2-2.3.3 Construction Requirements

1) Excavation and Subgrade:

a) Where directed by the City, unsuitable material in the subgrade shall be removed to a specific depth and backfilled with Gravel Borrow conforming to Section 3.2 of these Specifications.
b) Before any concrete is placed, the contractor shall bring the subgrade to the required line, grade and cross-section. The contractor shall maintain the subgrade in the required condition until the concrete is placed. Compaction shall be to 95% maximum dry density.
c) In all cases, subgrade and rock grade shall be approved by the City prior to concrete being placed.

2) All Driveways:
a) In locations where a new driveway is to be constructed and sidewalk and/or curb and gutter is already existing, the existing improvements must be totally removed and replaced to new driveway standards. It is not permissible to "knock-off" existing curb and install driveway apron. The total curb and gutter section must be removed, either by sawcutting or removing to the nearest expansion joint, and replaced to new driveway standards.
b) New driveways installed in areas where curb and gutter improvements are not existing, and not required to be installed, shall be paved with asphalt concrete or cement concrete from the existing edge of pavement to the property line regardless of whether the remainder of the driveway on the private property is paved.
c) In areas not fully improved with curbs and sidewalks, the elevation of the driveway at the point where it crosses the property line shall not be more than 3" higher than the elevation of the centerline of the existing paved street, if the driveway is rising on the private property side and no lower than level with the elevation of the centerline of the existing street if the driveway is sloping down on the private property side.

2-2.4 Street Illumination

2-2.4.1 General

Street lighting systems installation shall conform to the applicable portions of the APWA/WSDOT Standard Specification Section 8-20, except as modified by the City of Woodinville herein. The contractor shall install and maintain street lighting as requested by the City. Requests for installation, maintenance and repair of such street lighting shall receive the utility's prompt attention. Upon completion of the work the utility shall transmit to the City notice of completion and summary of any problems found.

2-2.4.2 Materials

Street light poles shall be aluminum with a concrete base.

2-2.4.3 Construction Requirements

1) Safety and Restoration:

a) The contractor shall at all times during construction post and maintain proper barricades and comply with all applicable regulations as required by the ordinances of the City and the laws of the state, including RCW 39.04.180 for trench safety systems.

2) Dangerous Conditions, Authority for City to Abate:
   a) Whenever construction, installation or excavation of facilities authorized by agreement with the City has caused or contributed to a condition that appears to substantially impair the lateral support of the adjoining street or public place, or endangers the public, an adjoining public place, street utilities, or City property, the Public Works Director may direct the appropriate utility company(s), at the utility's expense, to take actions to protect the public, adjacent public place, City property, or street utilities. Such action may include compliance within a prescribed time.

3) Site Restoration and As-Builts:
   a) Disturbed areas and pavements within the franchise area shall be restored to the preconstruction condition to the satisfaction of the Public Works Director. Within ten days following construction, the utility shall provide to the City as-built "construction corrected record" drawings of the completed work.

2-2.5 Underground Trenching

2-2.5.1 Trench Excavation

1) When trenching through existing pavement, the open cut shall be a neat line made by saw cutting a continuous line.

2) Where trench excavation equals or exceeds a depth of 4', the contractor shall provide, construct, maintain and remove, as required, safety systems that meet the requirements of the Washington Industrial Safety and Health Act, RCW 49.17, including WAC 296-155. The trench safety systems shall be designed, sealed, and signed by a licensed engineer, and meet accepted engineering requirements (see WAC 296-155-650-66411).

3) The contractor shall furnish, install, and operate all necessary equipment to keep excavations above the foundation level free from water during construction, and shall dewater and dispose of the water so as not to cause injury to public or private property or nuisance to the public. Sufficient pumping equipment in good working condition shall be available at all times for all emergencies, including power outage, and shall have available at all times competent workmen for the operation of the pumping equipment.

4) Dimensions:
The length of trench excavation in advance of conduit/pipe laying shall be kept to a minimum, and in no case shall exceed 200' unless specifically authorized by the Public Works Director. The maximum permissible trench width between the foundation level to the top of the conduit/pipe shall be 40" for conduit/pipe 15" or smaller inside diameter; or 1.5 times the conduit/pipe inside diameter plus 18" for conduit/pipe 18" or larger. If the maximum trench width is exceeded without written authorization of the Public Works Director, the contractor will be required to provide conduit/pipe of higher strength classification or to provide a higher class of bedding, as required by the Public Works Director.

5) Interferences:
The contractor shall not interfere with any existing utility without the written consent of the Public Works Director and the utility company or person owning the utility. If it becomes necessary to remove an existing utility, this shall be done by its owner. The contractor shall support and protect by timbers or other means all pipes, conduits, poles, wire or other apparatus which may be in any way affected by the excavation work, and do everything necessary to support, sustain and protect them under, over, along or across the work. In case any of the pipes, conduits, poles, wires or apparatus should be damaged, they shall be repaired by the agency or person owning them, and the expense of such repairs shall be charged to the contractor, and their bond shall be liable therefor. The contractor shall be responsible for any damage done to any public or private property by reason of the breaking of any water pipes, sewer, gas pipe, electric conduit, or other utility, and its bond shall be liable therefor. The contractor shall inform itself as to the existence and location of all underground utilities and protect the same against damage (Ord. 414 Sec. 10-1011, 1963).

6) Protection of Adjoining Property:
The contractor shall prevent injury to any adjoining property by providing proper foundations and taking other measures suitable for the purpose. Where in the protection of such property it is necessary to enter upon private property for the purpose of taking appropriate protective measures, the contractor shall obtain a license from the owner of such private property for such purpose, and if he/she cannot obtain a license from such owner, the Public Works Director may authorize him/her to enter the private premises solely for the purpose of making the property safe. The contractor shall at its own expense shore up and protect all buildings, walls, fences, or other property likely to be damaged during the progress of the excavation work and shall be responsible for all damage to public or private property or highways resulting from the contractor's failure to properly protect and carry out the work. Whenever it may be necessary for the contractors to trench through any lawn area, the sod shall be carefully cut and rolled and replaced after ditches have been backfilled as required in this chapter. All construction and maintenance work shall be done in a manner calculated to leave the lawn area clean of earth and debris and in a condition as nearly as possible that which existed before such work began. The contractor shall not remove, even temporarily, any trees or shrubs which exist in parking strip areas or easements

across private property without first having notified and obtained the consent of the property owner, or in the case of public property, the appropriate city department or city official having control of such property.

7) Fences, Barriers:
The contractor shall erect such fence, railing, or barriers about the site of the work as shall prevent danger to persons using the city street or sidewalks, and such protective barriers shall be maintained until the work is completed or the danger removed. At twilight there shall be placed upon such place of excavation and upon any excavated materials or structures, or other obstructions to streets, suitable and sufficiently lighted barricades which shall be maintained throughout the night for the entire construction period. It is unlawful for anyone to remove or tear down the fence, railing, or other protective barriers or any lights provided there for the protection of the public (Ord. 414 Sec. 10-1014, 1963).

8) Removal of Attractive Nuisance:
It is unlawful for the contractor to suffer or permit to remain unguarded, at the place of excavation or opening, any machinery, equipment or other device having the characteristics of an attractive nuisance likely to attract children and be hazardous to their safety or health.

2-2.5.2 Trench Backfill

1) Trenches parallel to the roadway centerline:
   a) Trench backfill above the pipe zone shown on Standard Detail 471, to within 4'of the finish surface, shall be controlled density fill (CDF), gravel borrow, or crushed surfacing top/base course.
   b) Native material will be considered suitable for trench backfill within this zone if it is:
      i) Capable of attaining the degree of compaction specified in Section 2.5.3 below;
      ii) Within reasonable tolerance of optimum moisture content; and
      iii) Free of organic material, clay, frozen lumps, rocks, or other deleterious matter.
   c) Trench backfill within the top 4' shall be controlled density fill (CDF).

2) Trenches perpendicular to the roadway centerline
   a) All trench backfill above the pipe zone shown on Standard Detail 471 shall be controlled density fill (CDF).
   b) The use of gravel borrow or crushed surfacing top/base course for backfill above the pipe zone shown on Standard Detail 471, to within 4' of the finished surface, may be approved by the Public Works Director on a case-by-case basis.

Unsuitable backfill material shall be removed from the site and hauled to an approved disposal site. The contractor shall provide the Public Works Director with the location

of all disposal sites to be used and also copies of the permits (including fill permit) and approvals for such disposal sites.

Imported material shall meet the requirements of gravel borrow, as specified in Section 2-3.2 of these Specifications, or crushed surfacing top/base course, as specified in Section 9-03.9(3) of the WSDOT/APWA Standard Specifications.

2-2.5.3 Compaction

Trench backfill (when materials other than CDF are allowed) shall be spread in layers and compacted by mechanical tampers of the impact type approved by the Public Works Director in accordance with Standard Detail 471. The backfill material shall be placed in successive layers with the first layer not to exceed 2' above the pipe, and the following layers not exceeding 12" in loose thickness, with each layer being compacted to the density specified below:

1) Improved areas such as street and sidewalks shall be compacted to at least 95% of maximum dry density for the entire depth.

2) Unimproved area or landscape areas shall be compacted to at least 90% of maximum dry density.

Water jetting or settling of backfill in trenches is not permitted.

2-2.5.4 Testing

1) Consistent with the above and prior to placing any surface materials on the roadway, it shall be the responsibility of the applicant to provide density test reports certified by a professional engineer. A minimum of one test shall be taken within every 500' of trench length and at depths up to 50% of trench depth, or as directed by the Public Works Director. Compaction of laterals or service line trenches shall be tested where directed by the Public Works Director. Testing of CDF shall be in accordance with ASTM D4832.

2) Whichever compaction method the installer elects, the backfill must test not less than the density specified in Section 2-2.5.3. Where testing shows that this has not been achieved, all affected backfill shall be removed, replaced, and retested.

2-2.5.5 Notification and Inspection

1) Any applicant, utilities, or others intending to trench in existing or proposed City roads shall notify the City Permit Center not less than one working day prior to beginning any work.

2) Failure to notify may necessitate testing or retesting by the City at the expense of the applicant or utility. Furthermore, the work may be suspended pending satisfactory test results.

2-2.5.6 Trenching Longitudinal to Roadway

Sewer, water, gas, telephone, power, cable TV, and storm lines that are within the roadway section and longitudinal to the roadway shall be backfilled to the pavement patch level or subgrade, whichever applies. Native material shall only be used when approved by the Public Works Director.

2-2.5.7 Trenching Transverse to Roadway

Utility trenching that crosses transversely to the roadway alignment will not be permitted unless it can be shown that alternatives such as jacking, auguring, or tunneling are not feasible, or unless the utility can be installed just prior to reconstruction or an overlay of the road. Should an open cut be approved, the trench shall be backfilled with CDF. One lane shall remain accessible to emergency vehicles at all times unless previous arrangements with the Public Works Department have been approved. On crossings required to be opened to traffic prior to final trench restoration, steel plates may be used as approved by the engineer.

2-2.5.8 Drain Pipe

When groundwater levels are encountered within 3' of finished grade, a 6" diameter, rigid, PVC, perforated drain pipe shall be installed parallel to all proposed storm mains. This perforated pipe shall be bedded in a minimum 6" depth of pea gravel. This pea gravel back fill shall further be placed to a minimum height of 6" above the pipe. The pipe shall be installed a minimum of 3' below finished grade. Drain pipes shall connect to the City storm system at their low point. If no City storm system is available for connection, in lieu of installing the drain pipe system described above, the entire trench section shall be backfilled with crushed surfacing base course.

2-2.5.9 Jacking, Auguring, or Tunneling

Tunneling shall be required as a condition of permit approval, in certain situations, by the Public Works Director, under pavements, buildings, railroad tracks, etc. The contractor shall install the pipe by jacking, auguring, or tunneling, or installing the pipe in a casing pipe by a combination of these methods. The contractor shall be liable for damage to any existing facilities as a result of the jacking, auguring, or tunneling installation work. Approvals from other agencies or companies may be required for the proposed work.

The contractor shall obtain all necessary permits, approvals and easements as may be necessary and shall provide copies to the City during the permit review process.

When use of a casing pipe is required, the contractor shall be responsible to select the gauge and size required, unless otherwise indicated on the plans, and consistent with his/her jacking or auguring operation, and shall be set to line and grade. During jacking or auguring operations, particular care shall be exercised to prevent caving ahead of the pipe which will cause voids outside the pipe. When the carrier pipe is installed within a casing pipe, the carrier pipe shall be skidded into position in an acceptable manner and to the line and grade as designated. The annular space

between the casing and the pipe shall be filled with controlled density fill or as otherwise approved.

The faces of the jacking pit shall be constructed by driving steel sheets, or installing timber lagging, as the excavation proceeds. The sheets or lagging shall extend a minimum of 5' below the bottom of the pit except at the entrance of the utility. Prior to jacking or auguring activities, shop drawings describing these activities, including dimensioning of pit length and size of underground borings and complete description of shoring, shall be submitted to the City for approval.

2-2.5.10 Pavement Restoration

Pavement restoration of longitudinal trenching for all underground utilities including water, sewer, power, gas, etc., shall be in accordance with Standard Detail 300A. The limits of paving shall be as determined by the Public Works Director on a project specific basis. Final paving shall be placed within seven working days after utility line installation and testing are complete.

2-2.5.11 Final Utility Adjustment

1) All utility covers that are located on proposed roadways shall be temporarily placed at subgrade elevation prior to placing crushed surfacing material.

2) Final adjustment of all covers and access entries shall be made following final paving, as shown in Standard Details 300B and 420.

3) In addition to restoration of the road as described above, the responsible utility shall care for adjacent areas in compliance with Sections 1-04.11, Final Cleanup, and 8-01, Roadside Seeding, in the WSDOT/APWA Standard Specifications. In particular:
   a) Streets and roads shall be cleaned and swept both during and after the installation work.
   b) Disturbed soils shall be final graded, seeded and mulched after installation of utility. Seeding and mulching by hand, using approved methods, will be acceptable for small areas.
   c) Ditch lines with erodible soil and subject to rapid flows may require seeding, jute matting, netting, or rock lining to control erosion.
   d) Any silting of downstream drainage facilities, whether open ditches, pipes, and catch basins, which results from the utility installation, shall be cleaned out and the work site restored to a stable condition as part of site cleanup.

2-2.6 Cement Concrete Curb and Gutter Sections

2-2.6.1 Description

The standard curb and gutter section shall be Type A-1 per Standard Detail 320A. Type A-1 standard curb and gutter are intended for use on both public and private roadways.

Curb sections conforming to Standard Detail 320B is intended for use in parking lot areas, temporary road sections, and other locations subject to the review and approval of the Public Works Director.

2-2.6.2 Materials

Concrete mix for curbs shall be Class 3000 structural air entrained. Slump of the concrete shall not exceed 3.5".

White pigment curing compounds shall not be used on curb and gutter.

2-2.6.3 Curing and Protection of Concrete

Transparent curing compounds shall be applied to all exposed surfaces immediately after finishing. Transparent curing compounds shall contain a color dye of sufficient strength to render the film distinctly visible on the concrete for a minimum period of four hours after application.

The contractor shall have readily available sufficient protective covering, such as waterproof paper or plastic membrane, to cover the pour of an entire day in event of rain or other unsuitable weather.

The curb shall be protected against damage or defacement of any kind until it has been accepted by the engineer. Sidewalk which is not acceptable to the engineer because of damage or defacement shall be removed and replaced by the contractor at his/her own expense.

2-2.7 Guardrails

Surfaces which are reasonably accessible to vehicles that are located above or adjacent to rockeries or walls in excess of 30" in height shall be protected by an approved guardrail system.

Roadway guardrails shall be provided at locations determined during the project design and plan review process and shall conform to WSDOT/APWA Standard Plan C-1, Beam Guardrail Type 1. End anchors shall conform to WSDOT/APWA Standard Plan C-6, Beam Guardrail Anchor Type 1.

Alternative methods proposed by the applicant and/or contractor for providing roadway vehicle and pedestrian protection will be considered by the Public Works Director on a case by case basis.

2-2.8 Cement Concrete Sidewalks

2-2.8.1 Description

This work shall consist of constructing cement concrete sidewalks, thickened edge

for sidewalks, curb ramps, and bus shelter pads, including excavation for the depth of the sidewalk and subgrade preparation, in accordance with Standard Details 321, 321A, 326A, 326B, 326C and 327.

Sidewalk drains shall be provided according to Standard Detail 328.

Cement concrete steps shall be provided where indicated on the plans and according to Standard Details 331 and 332.

1) Sidewalk Excavations – Footbridge:
   a) Any excavation made in any sidewalk or under a sidewalk shall be provided with a substantial and adequate footbridge over the excavation on the line of the sidewalk. The bridge shall be at least 5' wide and securely railed on each side so that pedestrians can pass over safely at all times.

2-2.8.2 Materials

Cement concrete shall be Class 3000. Slump of the concrete mix shall not exceed 3.5". The use of calcium chloride as an admixture is prohibited.

2-2.8.3 Construction Requirements

1) General:
   a) The curb and gutter section shall be placed prior to the placement of the sidewalk section unless otherwise directed by the City.
   b) Subgrade shall be approved by the City prior to concrete being placed. Generally, 0.25" deep V-grooves are to be placed on 5' centers, but at the discretion of the City this may be changed to make for a better match with the surrounding area.
   c) A minimum clear distance of four feet is required from the face of curb to any obstruction on or within the sidewalk in order to meet the requirements of the American Disabilities Act (ADA) unless otherwise noted.
   d) Mailboxes shall be set at locations approved by the Postmaster and may be adjacent to the curb in residential areas. Refer to Section 3-15 and Standard Detail 338.
   e) When there is insufficient suitable native material on the project site to fill low areas in the sidewalk subgrade and planting strip area, the contractor shall furnish, place, and compact Gravel Borrow for subgrade base.
   f) All sidewalks shall be constructed over a minimum of 4" of crushed surfacing top course compacted to 95% of maximum density.

2) Placing and Finishing Concrete:
   a) The concrete shall be spread uniformly between the forms and thoroughly compacted with a steel shod strikeboard. Through joints and dummy joints shall be located and constructed in accordance with the Standard Detail 321 and these Standards. In construction of through joints, the premolded joint filler shall be adequately supported until the concrete is placed on both sides of the joint.

3) Through and Contraction Joints:
   Standard locations for through joints for sidewalks are:
   a) At street margins produced and at 20' intervals.
   b) To separate concrete driveways, stairways, curb ramps and their landings from sidewalks.
   c) Around the vertical barrel of fire hydrants, around utility poles, sign posts, and large diameter underground utility cover castings when located in the sidewalk area.
   d) Longitudinally between concrete walks, curbs, paved planting strips, and solid masonry or concrete walls where they abut.
   e) To match as nearly as possible, the through joints in the adjacent pavement and curb when sidewalk abuts curb.

   Transverse contraction joints (dummy joints) shall be constructed with premolded material 0.5" width by 2" depth, and set at 15' intervals, or as decided by the City. At no time will dummy joint spacing exceed 15'.

4) Curb Ramps:
   a) Curb ramps shall be constructed in accordance with WSDOT Standard Detail F-3. Curb ramps shall be constructed where shown on the plans or where directed by the City. This work shall include curb ramps installed in new sidewalks and curb ramps to be installed in existing sidewalks. Existing sidewalks shall be neatly saw-cut full depth prior to construction of curb ramps.
   b) Curb ramps shall be constructed separately from the sidewalk to produce a definite break line between the ramp and the sidewalk. A 0.5" non-extruded through joint material shall be installed between the curb ramp and both the sidewalk and curb with edging.
   c) Ramp texturing shall be done with an expanded metal grate placed and removed from wet concrete to leave a diamond pattern as shown on Standard Details referenced above.

2-2.9 Mailboxes

Mailboxes shall be constructed in accordance with Standard Details 338, 339, and 340, and these Standards. Gang boxes supplied by the U.S. Postal Service shall be installed per Standard Detail 340.

2-2.10 Rockeries and Rock Walls

2-2.10.1 Description

This work shall consist of constructing rockeries with rock facing height of 4' or less used for erosion control or the containment of cuts and embankments. Work shall be performed in accordance with Standard Detail 333.

2-2.10.2 Materials

Rock for constructing new rock facings shall be large broken pieces of igneous rock obtained from a commercial quarry. Rock material shall be rectangular, selected pieces or rock sound and resistant to weathering. Rock shall be free of soft, weathered material and seams of soft rock susceptible to deterioration.

Perforated drain pipe shall be rigid PVC smooth interior pipe.

No. 2 coarse aggregate to be used around the perforated drain pipe behind the wall shall conform to Section 9-03.1(3)C of the WSDOT/APWA Standard Specifications.

Concrete for rockery cap shall be Class 3000. Lamp black coloring agent to match the color of the rockery shall be added to the cement concrete during mixing in an amount not to exceed 1.5 lbs/yd^3 of concrete.

Quarry rock shall be as specified in Section 3.8 of these Specifications.

The density of rock material shall be a minimum of 160 lbs/ft^3. The size categories for rock shall be as follows:

Approx. Size & Volume	**Approx. Weight** (lb)	**Minimum Dimension** (inches)	**Minimum Voltage** (cf)
One-man rock	160 to 400	12	1.75
Two-man rock	500 to 800	13	4
Three-man rock	900 to 1,200	16	6.6
Four-man rock	1,300 to 1,600	18	9

Rocks less than 1 ft^3 in volume or weighing less than 160 lbs shall not be used.

2-2.10.3 Construction Requirements

The first course of rock shall be placed on firm unyielding soil. There shall be full contact between the rock and soil, which may require shaping of the ground surface or slamming or dropping the rocks into place so that the soil foundation conforms to the rock face bearing on it.

As the rockery is constructed, the rocks shall be placed so that there are no continuous joint planes in either the vertical or lateral direction. Each rock shall bear on at least two rocks below it. Rocks shall be placed so that there is some bearing between flat rock faces rather than on joints.

Joints between courses shall slope downward towards the material being protected (away from the face of the rockery).

Voids in the rockery face shall not be greater than 50 in^2 for rocks over 3' high and 36 in^2 under 3' high. The maximum through void area will be 15 in^2 over 3' high and 10

in^2 under 3' high. Any large voids existing between each course of rock as it is placed shall be filled by wedging smaller rock of the same quality into the voids in the back side of the rockery.

Backfill material shall not be allowed to spill freely between the voids in the rockery. The rockery shall be backfilled in uniform layers as construction proceeds.

2-2.11 Pedestrian Hand Railings

Pedestrian handrails shall be galvanized steel or aluminum and shall be constructed in accordance with Standard Details 329 and 330.

2-2.11.1 Fabrication

Before fabricating the railing, the contractor shall submit six copies of the shop drawings for the City's approval. The applicant and/or contractor may substitute other rail connection details for those shown in the project plans if details of these changes are indicated as such in the shop drawings and if the City approves the details. In reviewing the shop drawings, the City will indicate only that they appear complete and address the basic project requirements. Such review does not indicate a check on dimensions.

Welding shall conform to the requirements of the *Structural Welding Code AWS D1.1* for steel, and to the requirements of the *Specifications for Aluminum Structures* of the Aluminum Association, for aluminum alloys. All exposed welds shall be ground flush with adjacent surfaces.

Railing panels shall be straight and true to dimensions. Adjacent railing panels shall align with each other with a variation not to exceed 1/16". Joints shall be matchmarked.

When railing is constructed on a curved surface, either horizontal or vertical, the railing shall conform closely to the curvature of the surface by means of a series of short chords. The lengths of the chords specified in the shop drawings shall be the distance center to center of rail posts.

Zinc used for galvanizing shall be grade Prime Western conforming to ASTM B6.

Ornamental railing shall be painted with a rust proof metal primer and one coat of ornamental iron metal paint.

2-2.11.2 Installation

The railing shall be erected in accordance with the plans on anchor bolts, or in holes formed by inserts provided in the concrete railing base to receive the railing posts. Sheet metal inserts shall be removed before the erection of the railing.

No railing shall be erected until the sidewalk or structure to which it is to be attached is completed and all falsework supporting the system is released.

The railing shall be carefully erected, true to line and grade. Posts and balusters shall be vertical, not exceeding 1/8" from the vertical for the full height of the panel.

Slip joints shall be as shown on Standard Details 329 and 329A. Railing installed without slip joints will be rejected and the applicant and/or contractor shall install new railing at his/her own expense.

2-3. MATERIALS

2-3.1 Controlled Density Fill (CDF)

CDF shall conform to the following:

1. Portland Cement: Type I-II AASHTO M85.
2. Mineral Filler Admixtures: pozzolans or fly ash (ASTM C-618, Class F).
3. Aggregate: WOODINVILLE washed coarse sand No. 2.

CDF shall be used in the following proportions for 1 yd^3. Batch weights may vary depending on specific weights of aggregates.

Portland Cement	50 lbs/yd^3
Fly Ash	250 lbs/yd^3
No. 2 Washed Coarse Sand (SSD)	3,200 lbs/yd^3
Water	50 $gals/yd^3$ (Max.)

Add sufficient water to provide a 6" to 8" slump delivered in place at the job site.

2-3.2 Gravel Borrow

Gravel borrow shall conform to the following:

U.S. Standard Sieve Size	Percent Passing by Dry Weight
3"	100
1.25"	80-100
No. 4	20-70
No. 40	0-25
No. 200	0-5
Sand Equivalent	50 minimum

2-3.3 Non-Shrink Cement Sand Grout

Non-shrink cement sand grout shall be proportioned as follows:

1 part high early strength (H.E.S.) cement.
2 parts clean fine-grained sand by weight and well-mixed with sufficient water to obtain a stiff consistency.

Unpolished aluminum powder shall be added to the dry cement in the proportion of one heaping teaspoonful per sack of cement no more than 30 minutes before the grout mixture reaches its final in-place position.

The required strength of the non-shrink concrete or grout shall be fc=4,000 psi and be verified by the cube strength test. The strength shall be confirmed by Schmidt hammering of the pads.

Prior to placing the grout, the contact surface shall be thoroughly cleaned, roughened and wetted with water. The grout shall be covered with burlap sacks after the initial concrete set and wetted at regular intervals until the required strength is obtained.

2-3.4 No. 2 Washed Coarse Sand

No. 2 washed coarse sand shall be a clean mixture free from organic matter and conforming to the following gradation:

U. S. Standard Sieve Size	Percent Passing By Weight
0.5" inch	100
#4	65-100
#50	0-10
#200	0-3

All percentages are by weight

2-3.5 Spawning Gravel

Spawning gravel shall be clean, well-rounded, uniformly graded, and shall conform to the following gradation:

Sieve Size (in^2)	Percent Passing
4	100
3	85 - 95
1-1/2	65 - 75
1/2	0 - 50
1/4	2 maximum

All percentages are by weight.

2-3.6 Quarry Rock

Quarry rock shall meet the following requirements:

U. S. Standard Sieve Size (inches)	Percent Passing By Weight
4	100
2	40 maximum
3/4	10 maximum

All percentages are by weight.

City of Woodinville
Transportation Infrastructure Standards and Specifications

PART 3
STANDARD DETAILS

Table of Contents

The following standard plans have been developed for use within the City of Woodinville, and have been compiled from a variety of sources. For construction not covered by these Standard Plans, use the WSDOT/APWA Standard Plans. For construction not covered by either the Woodinville or WSDOT/APWA Standard Plans, use the King County Road Standards.

STREET CROSS SECTIONS

100 Typical Roadway Section

101 Typical Roadway Section, Private Street

102A Typical Illustration, Private-Commercial

102B Typical Roadway Section, Private-Commercial

103A Typical Illustration, Low Density Residential Streets

103B Typical Roadway Section, Low Density Residential Streets

104A Typical Illustration, High Density Residential Streets

104B Typical Roadway Section, High Density Residential Streets

105A Typical Illustration, Collector-Residential

105B Typical Roadway Section, Collector-Residential

106A Typical Illustration, Collector-Commercial

106B Typical Roadway Section, Collector-Commercial

107A-1 Typical Illustration, 3-Lane Minor Arterial Streets

107A-2 Typical Illustration, 3-Lane Minor Arterial Streets With Bike Lanes

107B Typical Roadway Section, 3-Lane Minor Arterial Streets

108A-1 Typical Illustration, 3-Lane Principal Arterial Streets

108A-2 Typical Illustration, 3-Lane Principal Arterial Streets With Bike Lanes

109A-1 Typical Illustration, 5-Lane Principal Arterial Streets

109A-2 Typical Illustration, 5-Lane Principal Arterial Streets With Bike Lanes

109B Typical Roadway Section, Principal Arterial Streets

110A-1 Typical Illustration, Tourist District Street – A

110A-2 Typical Illustration, Tourist District Street – B

110B-1 Typical Roadway Section, Tourist District Street – A

110B-2 Typical Roadway Section, Tourist District Street – B

111A Typical Illustration, Central Business District Street – A

111B Typical Roadway Section, Central Business District Street – A

112A Typical Illustration, Central Business District Street – B

112B Typical Roadway Section, Central Business District Street – B

MISCELLANEOUS STREET DETAILS

300A Pavement Patching Details

300B Manhole / Catch Basin and Valve Box Adjustment

302 Typical Utility Location

313 Typical Roadway Section, Alley

314 Typical Cul-de-Sac, Residential Streets

314A Typical "Hammerhead", Residential Streets

315A Maintenance Access & Pedestrian Path/Bikeway Class I

316 Driveway and Intersection Sight Triangles

317 Typical Loop Layout

318 Downtown Street Light

320A Cement Concrete Curb & Gutter, Type A-1

320B Extruded Cement Concrete Curb

321 Cement Concrete Sidewalk Details

322	Cement Concrete Driveway Type 1
323	Cement Concrete Driveway Type 2
324	Cement Concrete Driveway Type 3
326A	Type A Curb Ramp
326B	Curb Ramp Option 1
326C	Curb Ramp Option 2
327	Curb Ramp, Typical Locations
329	Pedestrian Handrail (2 sheets)
330	Ornamental Handrail
331	Sign Mounting Detail
336	Survey Control Monument
338	Multiple Mailbox Structure Installation
339	Mailbox Structure for One or Two Boxes
340	N.D.C.B.U. Mailbox Cluster (2 sheets)
341	Typical Tree Planting
342	Street Tree Location
343A	Typical Parking Layout
345A	Removable Bollard
345B	Fixed Bollard
350A	Pavement Markings
350B	Pavement Markings
350C	Pavement Markings
350D	Pavement Markings
350E	Pavement Markings
350F	Bicycle Lane Markings (Right Turn Only)
350G	Bicycle Lane Markings (Right Turn Only)

DRAINAGE DETAILS

404A	Stabilized Construction Entrance
405A	Interceptor Ditch with Rock Check Dams
405B	Pipe Slope Drain
406A	Storm Drain Inlet Protection Sedimentation Trap
406B	Storm Inlet Protection
407A	Silt Fence
420	Catch Basin Installation
421	Through Curb Inlet Installation
425	Through Curb Inlet - Frame & Grate
430	Floatable Material Separator - 6" or 8" Pipe
431	Floatable Material Separator - 12" and Larger Pipe
435	Oil/Water Separator – API
436	Oil/Water Separator - Coalescing Plate – Sample
437	Oil/Water Separator – Layout
440	Control Structure – 72" Dia. or Larger
441	Restrictor Riser
443	Flap Gate
444	Shear Gate & Lift Handle
461	Pipe Outfall - Quarry Spalls
462	Pipe Outfall - Gabion Type
464	French Drain Under Road
465	Pipe End Section, Trash Rack
466	Cone Trash Rack (Overflow Structure)
467	Pipe Anchors
468	Flow Diversion Structure

470 Bedding for Pipe in Trenches

471 Trench Compaction

490 Detention/Infiltration System for Small Projects

491 Control Structure for Small Projects

492 Infiltration System for Small Projects

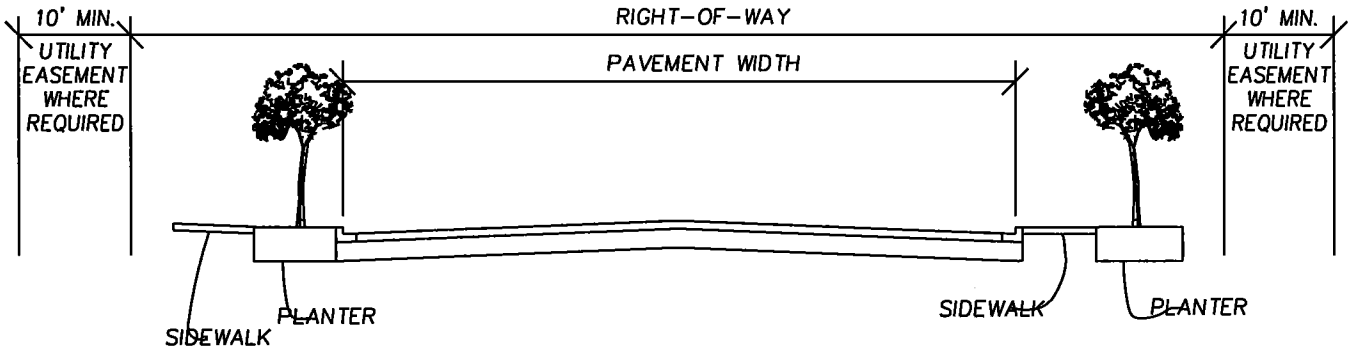

Type of Street	Right-of-Way Width	Pavement Width	Parking	Bike Lanes	Std. Dwg. Number	Notes
Private Street						
1 & 2 Lots	Varies 10 ft to 20 ft	Varies 10 ft to 20 ft	N/A	N/A	101	5
3 & 4 Lots	20	20	No	No	101	
Commercial	48	28	No	No	102A	
Residential Street						
Low Density	60	28	Yes	No	103A	1
High Density	60	36	Yes	No	104A	2
Collector						
Residential	60	36	No	Yes	105A	
Commercial	60	36	Yes	No	106A	
Minor Arterial						
3 Lane	64	36	No	No	107A1	
3 Lane	74	46	No	Yes	107A2	
Tourist District Street A	90	42	No	No	110A1	
Tourist District Street B	90	58	No	No	110A2	
Central Business District A	70	46	No	Yes	111A	
Central Business District B	70	36	No	No	112A	
Principal Arterial						
3 Lane	64	36	No	No	108A1	
3 Lane	74	46	No	Yes	108A2	
5 Lane	100	60	No	No	109A1	
5 Lane	100	70	No	Yes	109A2	
Tourist District Street A	90	42	No	No	110A1	
Tourist District Street B	90	58	No	No	110A2	
Central Business District A	70	46	No	Yes	111A	
Central Business District B	70	36	No	No	112A	

NOTES:

1 "Low Density Residential" streets are intended to serve areas with zoning principally consisting of less than R-4 classification.
2 "High Density Residential" streets are intended to serve areas with zoning equal to or greater than R-4 classification.
3 Street classifications are designated by Ordinance in the City Transportation Plan or the City Comprehensive Plan.
4 Pavement section must be designed using AASHTO or Asphalt Institute design procedures.
5 See Section 4.6 for driveway criteria. Access easements shall be used for all driveways serving 2 lots.

N.T.S.

City of Woodinville DEPARTMENT OF PUBLIC WORKS	TYPICAL ROADWAY SECTION	100 revision date JAN, 99

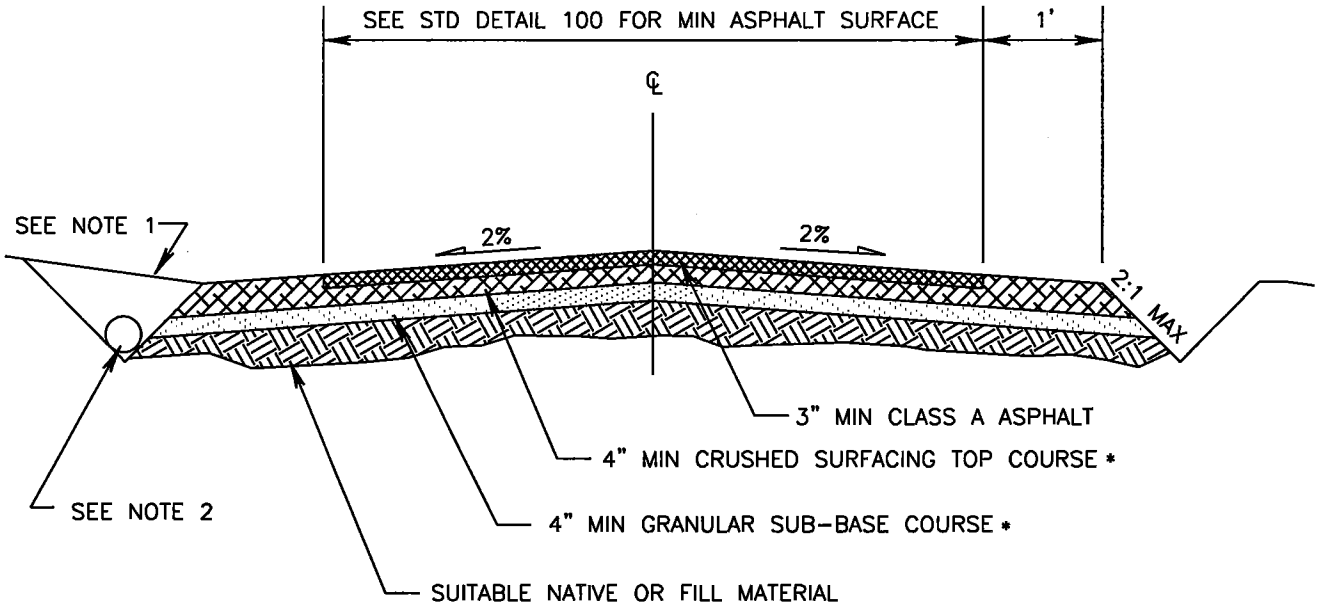

* – COMPACTED TO 95% MAX. DENSITY

NOTES:

1 DRIVEWAY GRADE AT RIGHT-OF-WAY LINE SHALL CONFORM TO SECTION 1-4.2.6 UNLESS OTHERWISE APPROVED BY PUBLIC WORKS DIRECTOR.

2 A 12 INCH MINIMUM CONCRETE OR POLYVINYL CHLORIDE (PVC) SMOOTH INTERIOR PIPE IS REQUIRED UNDER ALL DRIVEWAYS. COVER OVER PIPE SHALL CONFORM TO THE PIPE MANUFACTURER'S RECOMMENDATIONS.

N.T.S.

City of Woodinville DEPARTMENT OF PUBLIC WORKS	TYPICAL ROADWAY SECTION PRIVATE STREET	101 revision date NOV, 98

"PRIVATE – COMMERCIAL" STREETS

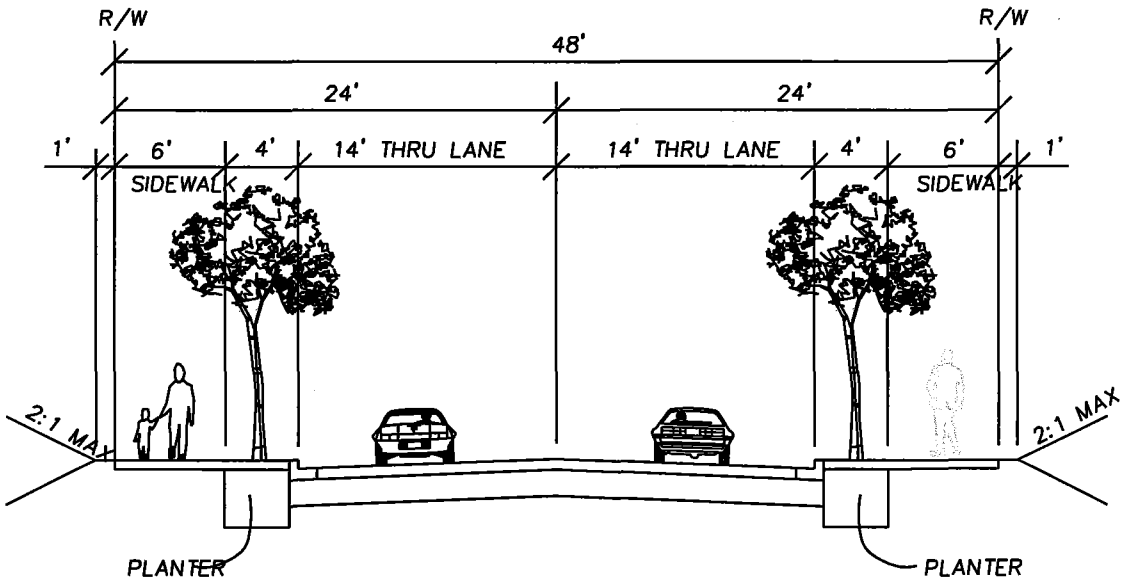

N.T.S.

City of Woodinville DEPARTMENT OF PUBLIC WORKS	TYPICAL ILLUSTRATION PRIVATE–COMMERCIAL	102A revision date NOV, 98

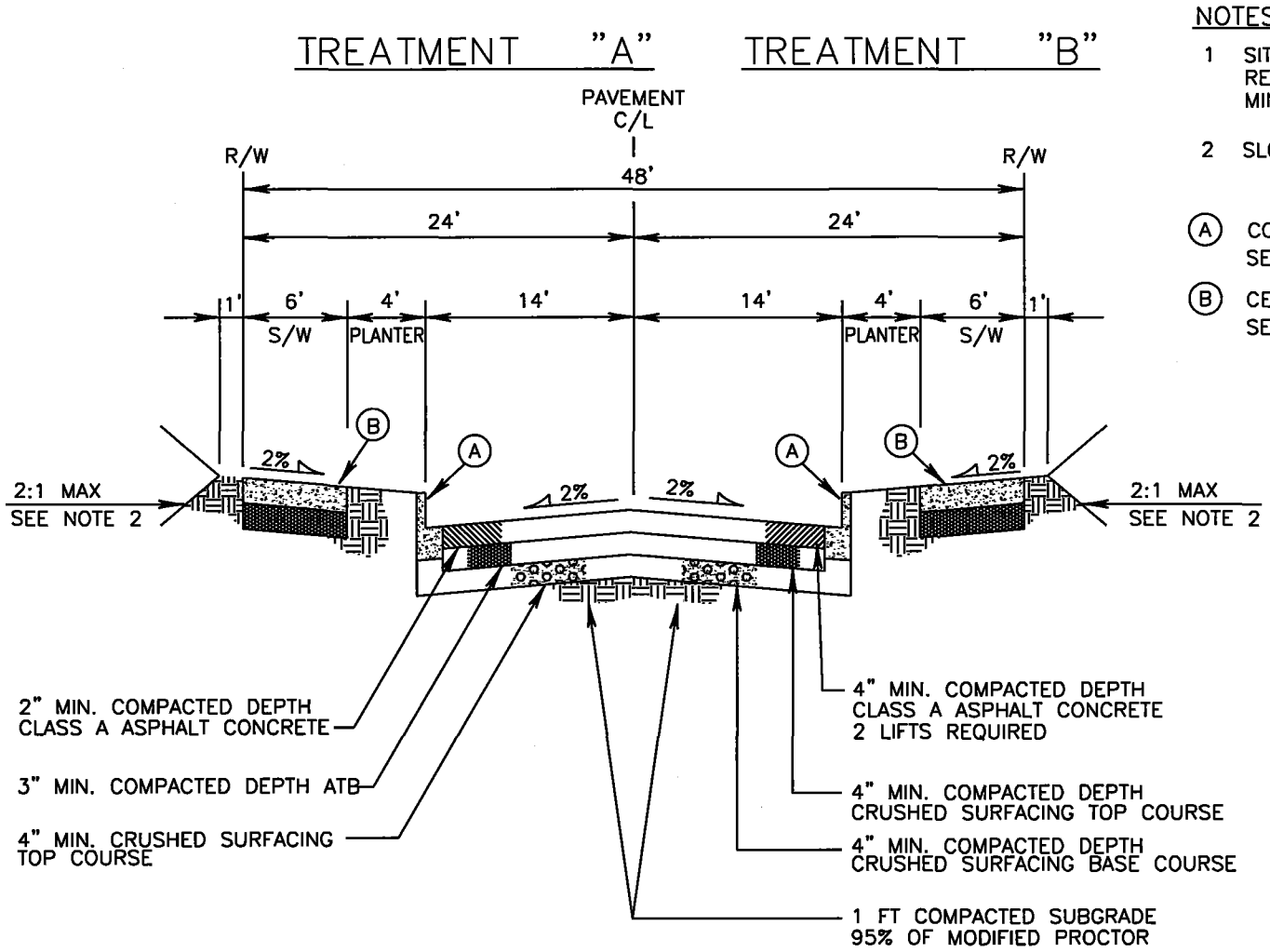

NOTES:

1 SITE SPECIFIC PAVEMENT DESIGNS ARE REQUIRED. PAVEMENT SECTION SHOWN IS MINIMUM REQUIRED.

2 SLOPE EASEMENTS MAY BE REQUIRED

(A) CONCRETE CURB AND GUTTER TYPE A-1
SEE STD DETAIL 320A

(B) CEMENT CONCRETE SIDEWALK
SEE STD DETAIL 321

N.T.S.

City of Woodinville DEPARTMENT OF PUBLIC WORKS	TYPICAL ROADWAY SECTION PRIVATE-COMMERICIAL	102B revision date NOV, 98

"LOW DENSITY RESIDENTIAL" STREETS

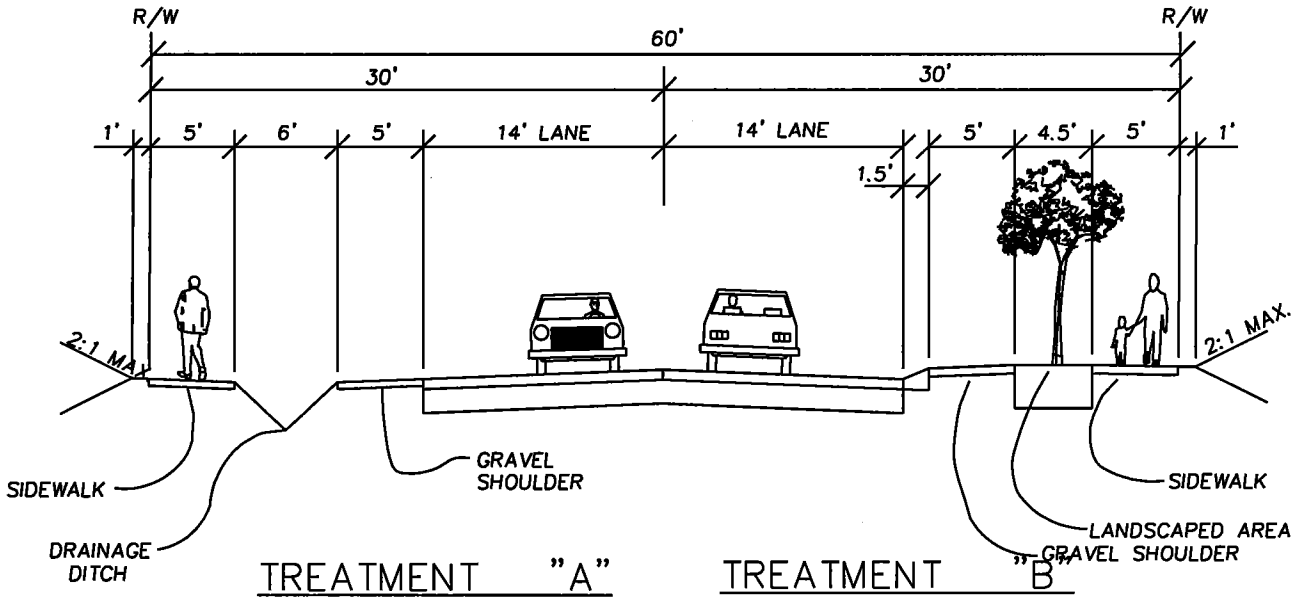

NOTES:

1 "LOW DENSITY RESIDENTIAL" STREETS ARE INTENDED TO SERVE AREAS WITH ZONING LESS THAN R-4 CLASSIFICATION.

2 SPECIFIC TREATMENT TO BE USED REQUIRES APPROVAL FROM PUBLIC WORKS DEPARTMENT.

3 TREATMENT "A" IS INTENDED FOR THE MORE RURAL AREA OF THE CITY EAST OF DOWNTOWN. THIS AREA IS DEFINED AS THE "LEOTA" AREA IN FIGURE 1-2 OF THE CITY'S COMPREHENSIVE PLAN.

4 TREATMENT "B" IS INTENDED FOR THE AREAS WEST OF DOWNTOWN.

N.T.S.

City of Woodinville DEPARTMENT OF PUBLIC WORKS	TYPICAL ILLUSTRATION LOW DENSITY RESIDENTIAL STREETS	103A revision date NOV, 98

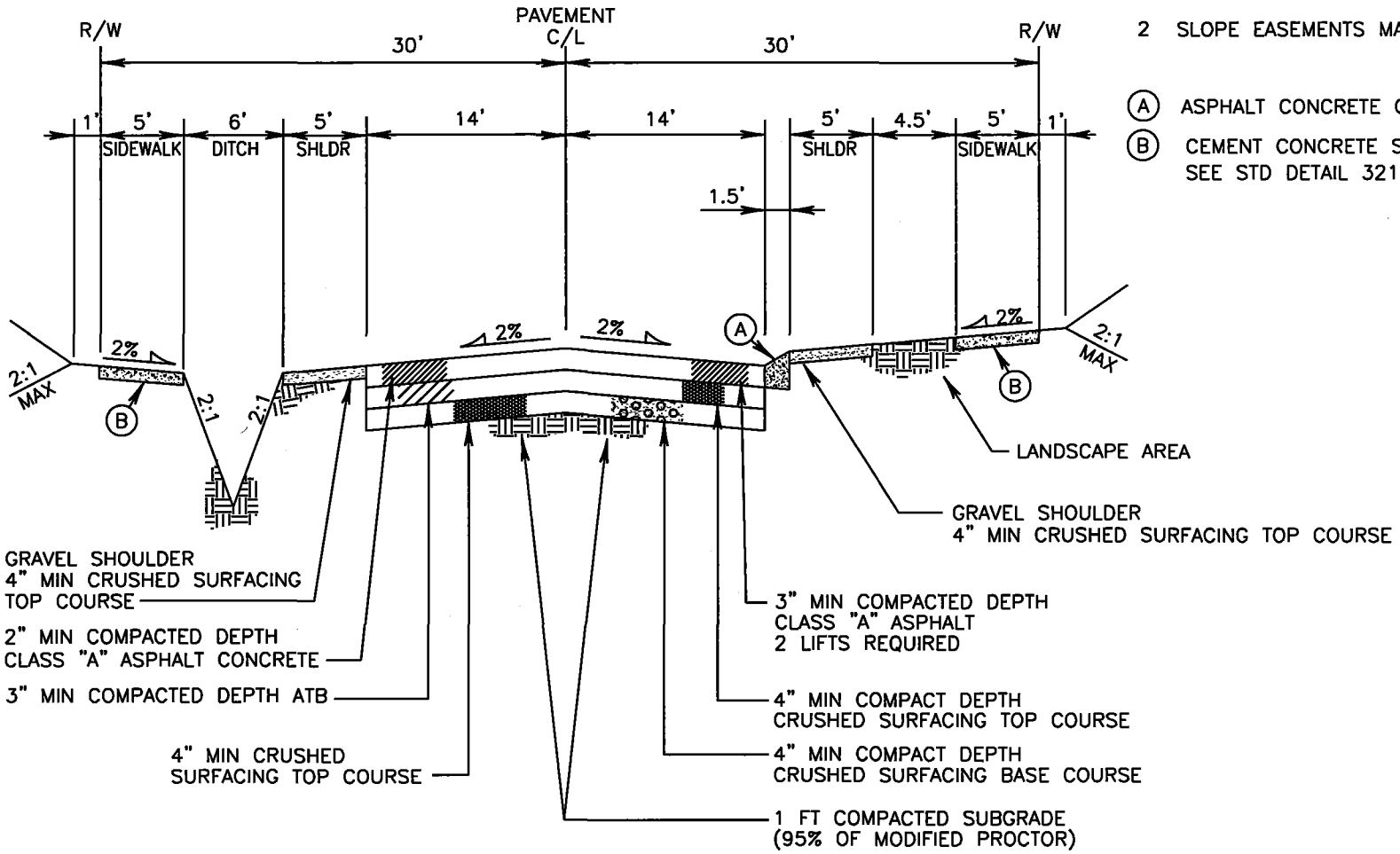

NOTES:

1 SITE SPECIFIC PAVEMENT DESIGNS ARE REQUIRED. PAVEMENT SECTION SHOWN IS MINIMUM REQUIRED.

2 SLOPE EASEMENTS MAY BE REQUIRED.

(A) ASPHALT CONCRETE CLASS A WEDGE CURB.

(B) CEMENT CONCRETE SIDEWALK SEE STD DETAIL 321.

City of Woodinville DEPARTMENT OF PUBLIC WORKS	TYPICAL ROADWAY SECTION LOW DENSITY RESIDENTIAL STREETS	103B revision date NOV, 98

"HIGH DENSITY RESIDENTIAL" STREETS

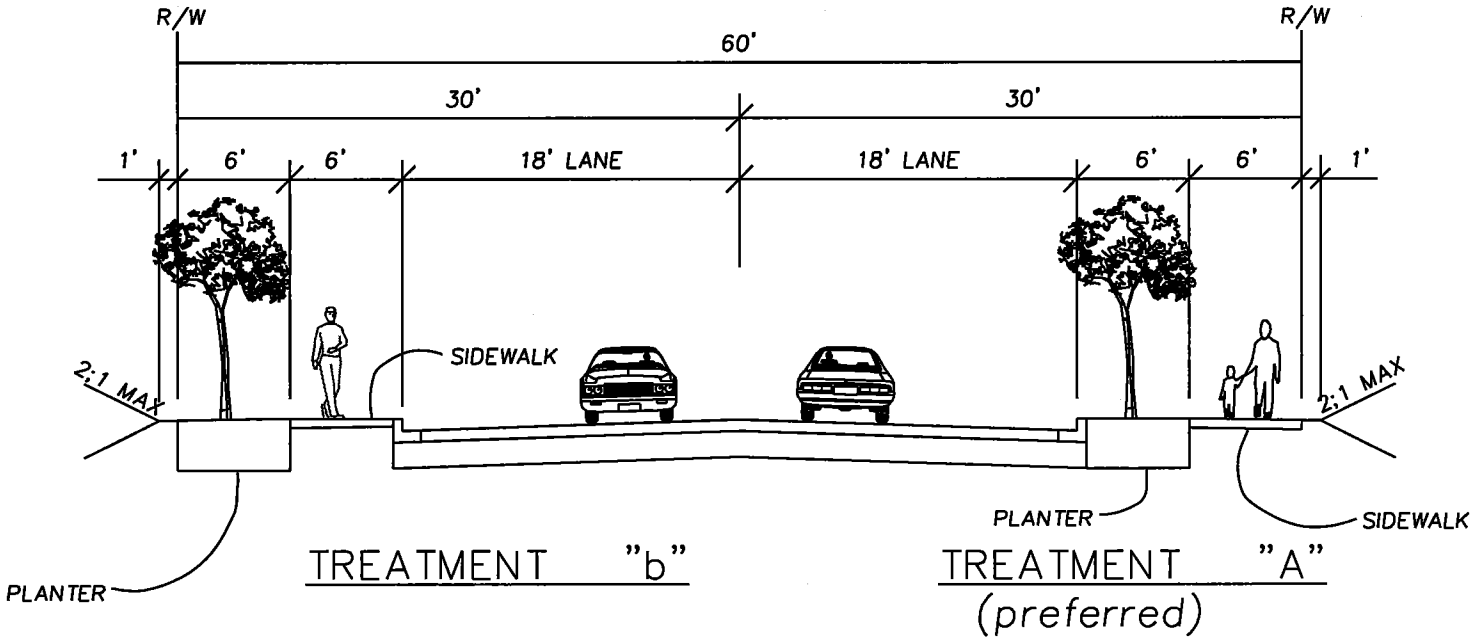

NOTES:

1 "HIGH DENSITY RESIDENTIAL" STREETS ARE INTENDED TO SERVE AREAS WITH ZONING R-4 OR GREATER CLASSIFICATION.

2 TREATMENT B REQUIRES APPROVAL FROM PUBLIC WORKS DEPARTMENT

N.T.S.

City of Woodinville DEPARTMENT OF PUBLIC WORKS	TYPICAL ILLUSTRATION HIGH DENSITY RESIDENTIAL STREETS	104A revision date NOV, 98

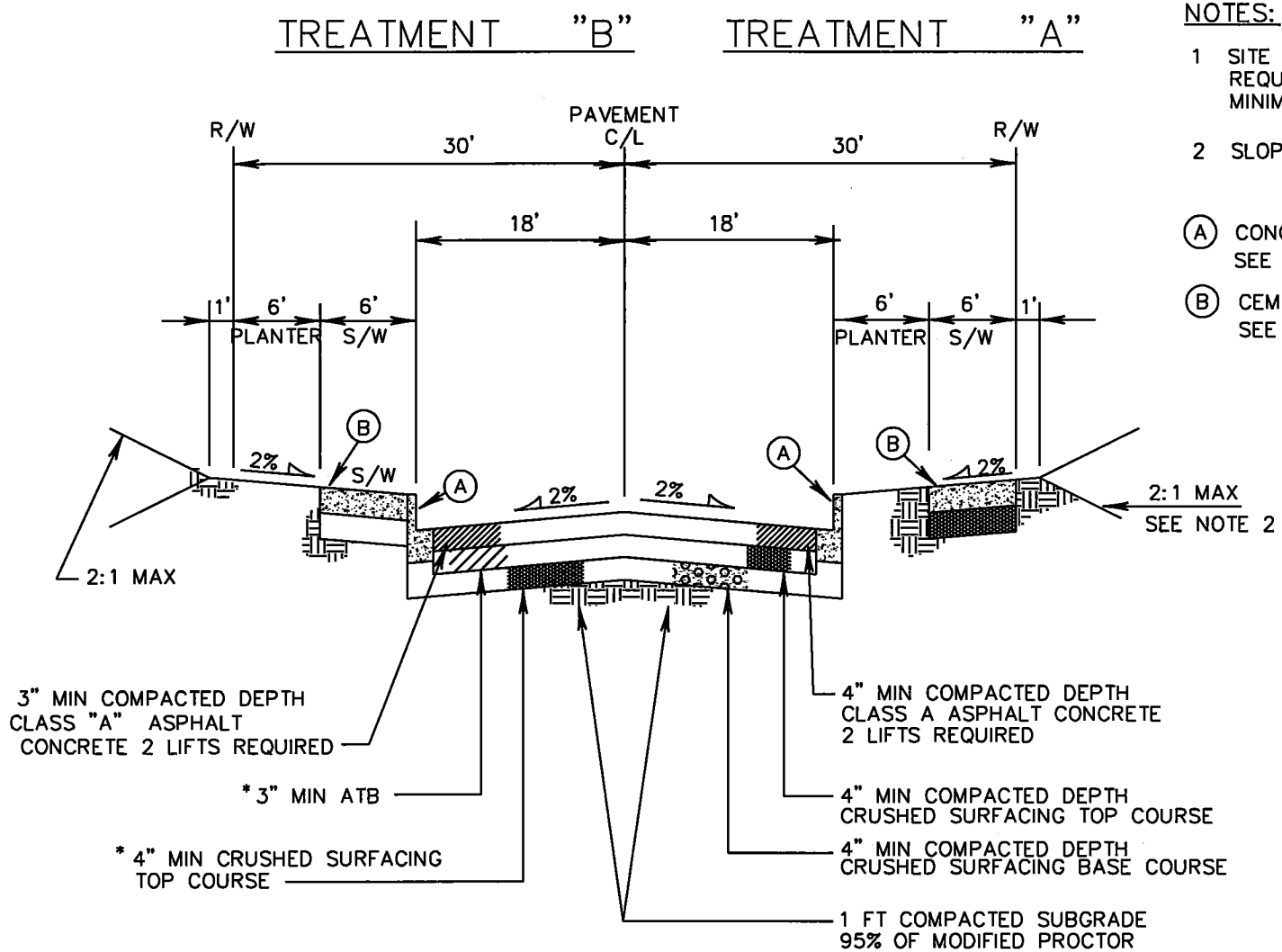

NOTES:

1 SITE SPECIFIC PAVEMENT DESIGNS ARE REQUIRED. PAVEMENT SECTION SHOWN IS MINIMUM REQUIRED.

2 SLOPE EASEMENTS MAY BE REQUIRED

(A) CONCRETE CURB AND GUTTER TYPE A-1
SEE STD DETAIL 320A

(B) CEMENT CONCRETE SIDEWALK
SEE STD DETAIL 321

* ALTERNATE PAVEMENT SECTION

STANDARD PAVEMENT SECTION

N.T.S.

City of Woodinville DEPARTMENT OF PUBLIC WORKS	TYPICAL ROADWAY SECTION HIGH DENSITY RESIDENTIAL STREETS	104B revision date NOV, 98

COLLECTOR

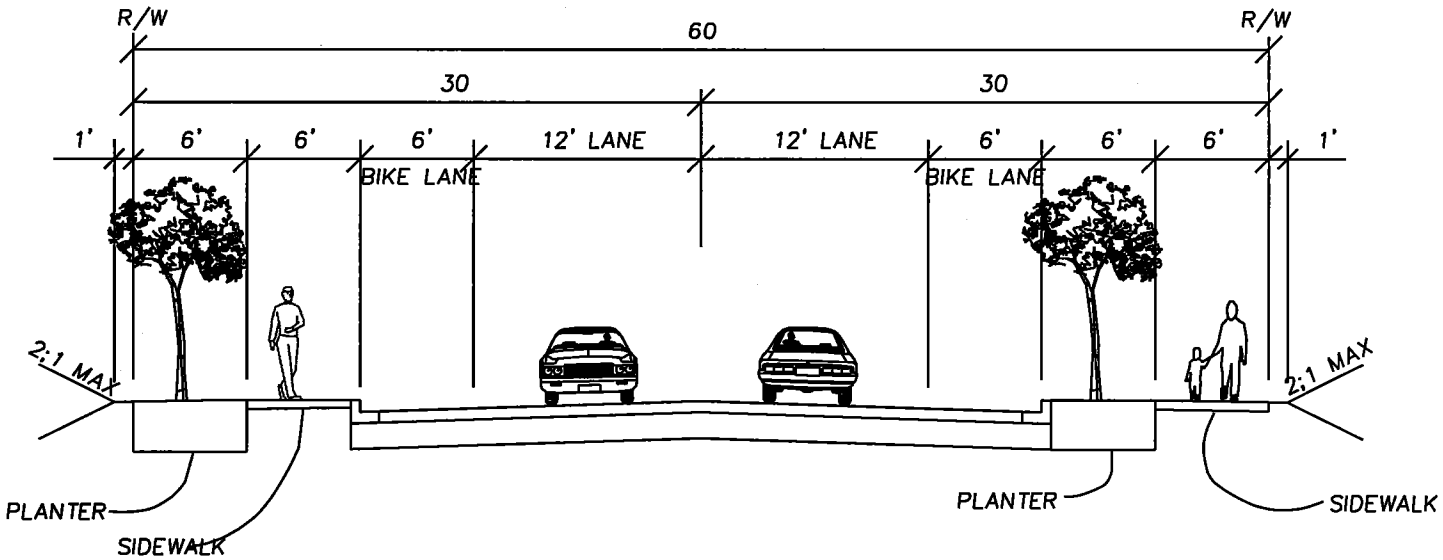

TREATMENT "B"

TREATMENT "A"
(preferred)

RESIDENTIAL

NOTE:

1 "COLLECTOR RESIDENTIAL" STREETS ARE INTENDED TO SERVE AREAS WITH ZONING PRINCIPALLY CONSISTING OF R-4 AND GREATER CLASSIFICATION AS DESIGNATED IN THE CITY'S COMPREHENSIVE PLAN.

2 TREATMENT B REQUIRES APPROVAL FROM PUBLIC WORKS DEPARTMENT

N.T.S.

City of Woodinville DEPARTMENT OF PUBLIC WORKS	TYPICAL ILLUSTRATION COLLECTOR-RESIDENTIAL	105A revision date NOV, 98

TREATMENT "A"

TREATMENT "B"

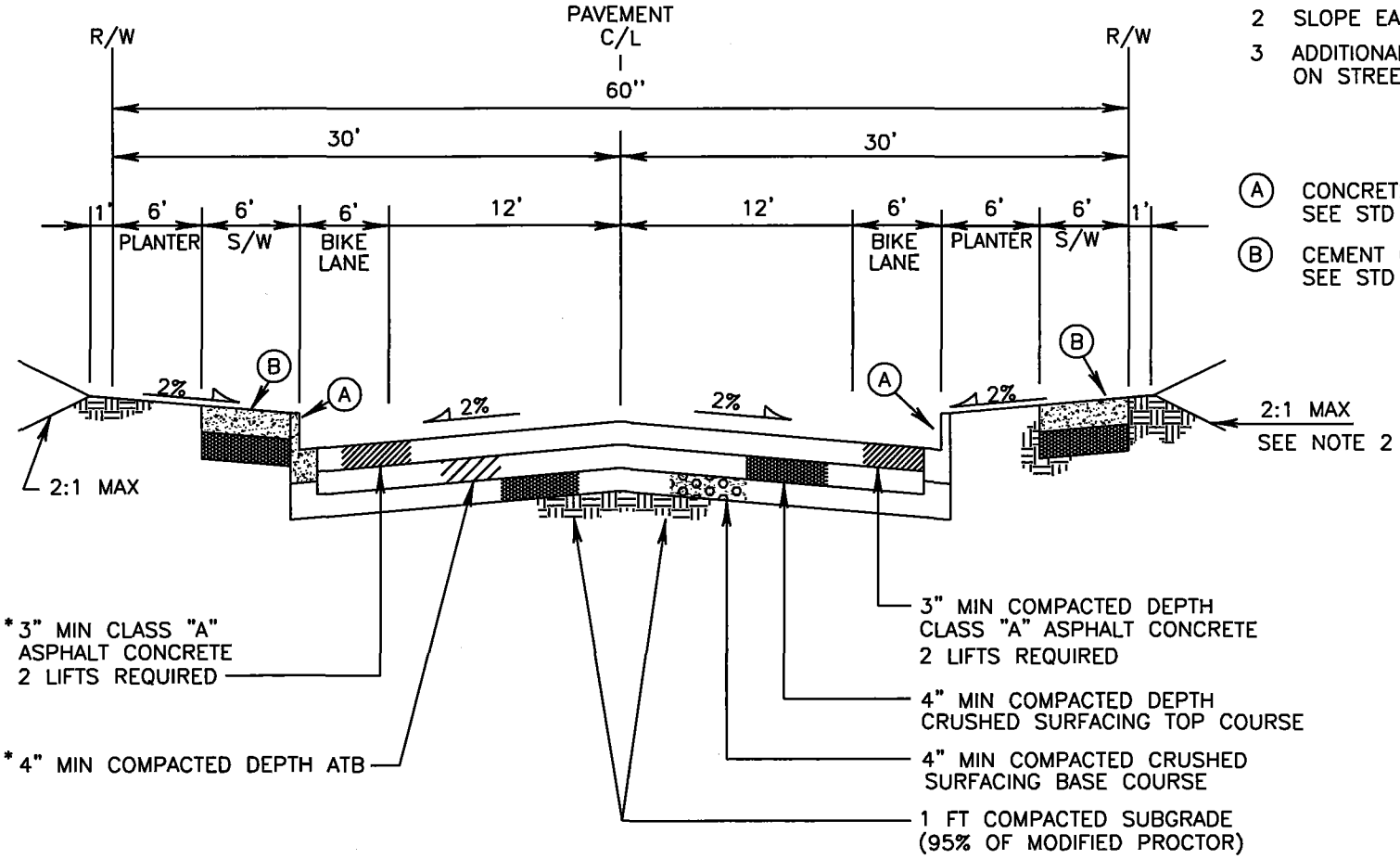

NOTES:

1. SITE SPECIFIC PAVEMENT DESIGNS ARE REQUIRED. PAVEMENT SECTION SHOWN IS MINIMUM REQUIRED.
2. SLOPE EASEMENTS MAY BE REQUIRED.
3. ADDITIONAL R/W WILL BE REQUIRED IF ON STREET PARKING IS PROVIDED.

(A) CONCRETE CURB AND GUTTER TYPE A-1, SEE STD DETAIL 320A

(B) CEMENT CONCRETE SIDEWALK, SEE STD DETAIL 321

* ALTERNATE PAVEMENT SECTION

STANDARD PAVEMENT SECTION

N.T.S.

City of Woodinville DEPARTMENT OF PUBLIC WORKS	TYPICAL ROADWAY SECTION COLLECTOR–RESIDENTIAL	105B revision date NOV, 98

COLLECTOR–COMMERCIAL

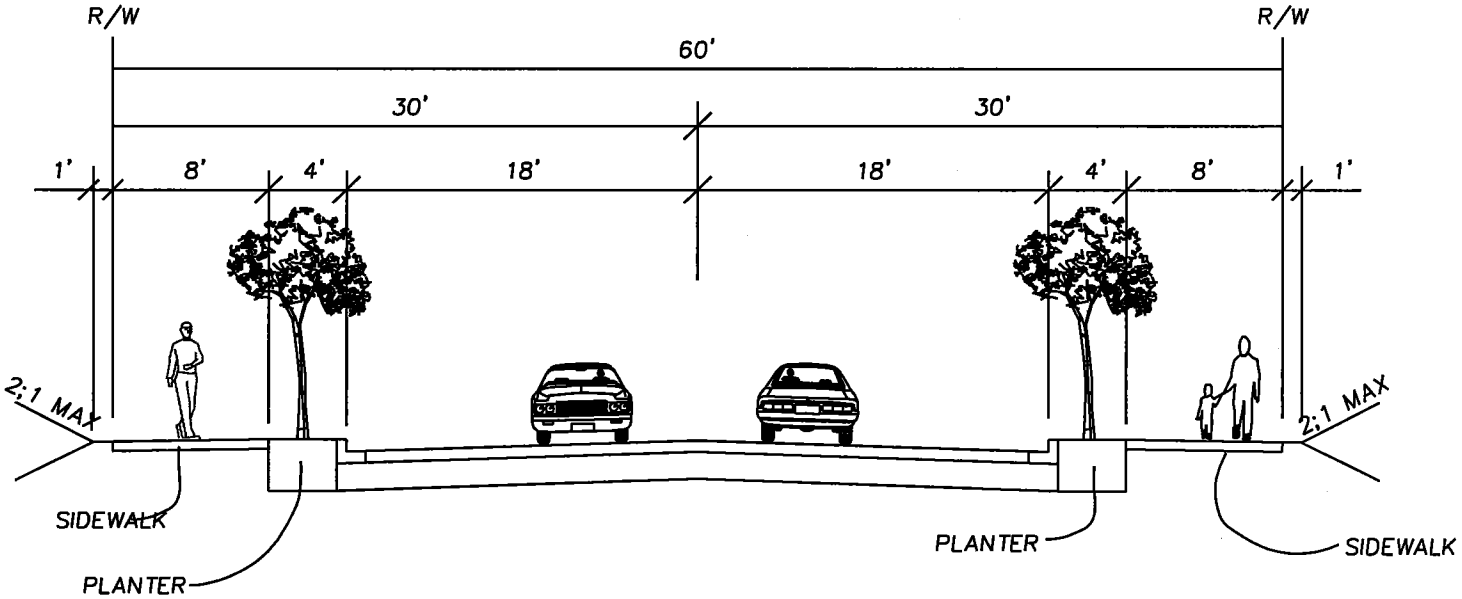

NOTE:

1 "COLLECTOR–COMMERICAL" STREETS ARE INTENDED TO SERVE AREAS WITH ZONING GREATER THAN R–4 CLASSIFICATION AS DETERMINED IN THE CITY'S COMPREHENSIVE PLAN.

N.T.S.

City of Woodinville DEPARTMENT OF PUBLIC WORKS	TYPICAL ILLUSTRATION COLLECTOR–COMMERCIAL	106A revision date NOV, 98

NOTES:

2 SLOPE EASEMENTS MAY BE REQUIRED

(A) CONCRETE CURB AND GUTTER TYPE A-1
SEE STD DETAIL 320A

(B) CEMENT CONCRETE SIDEWALK
SEE STD DETAIL 321

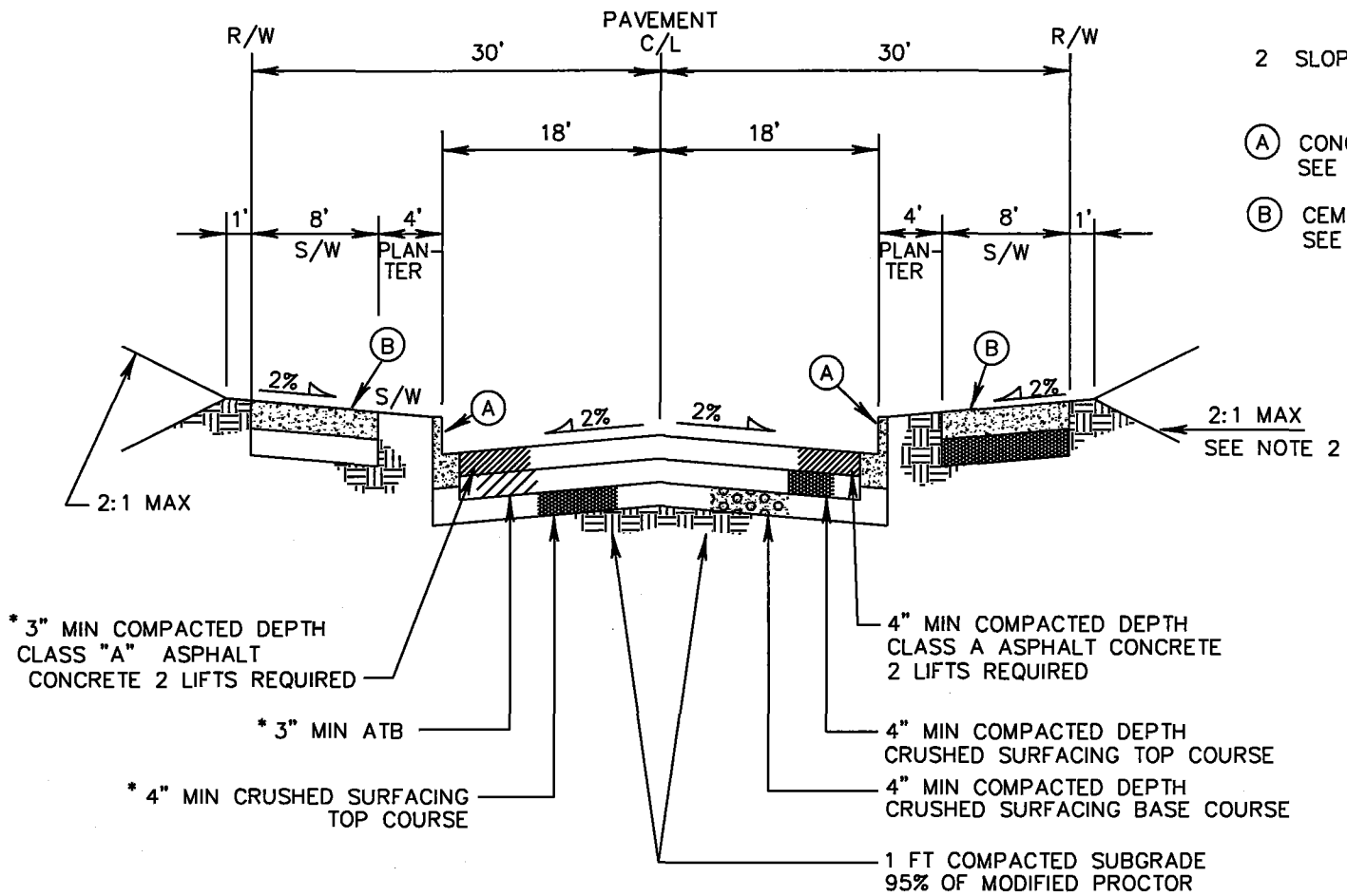

* ALTERNATE PAVEMENT SECTION

STANDARD PAVEMENT SECTION

N.T.S.

City of Woodinville DEPARTMENT OF PUBLIC WORKS	TYPICAL ROADWAY SECTION COLLECTOR-COMMERCIAL	106B revision date NOV, 98

3-LANE MINOR ARTERIAL STREETS

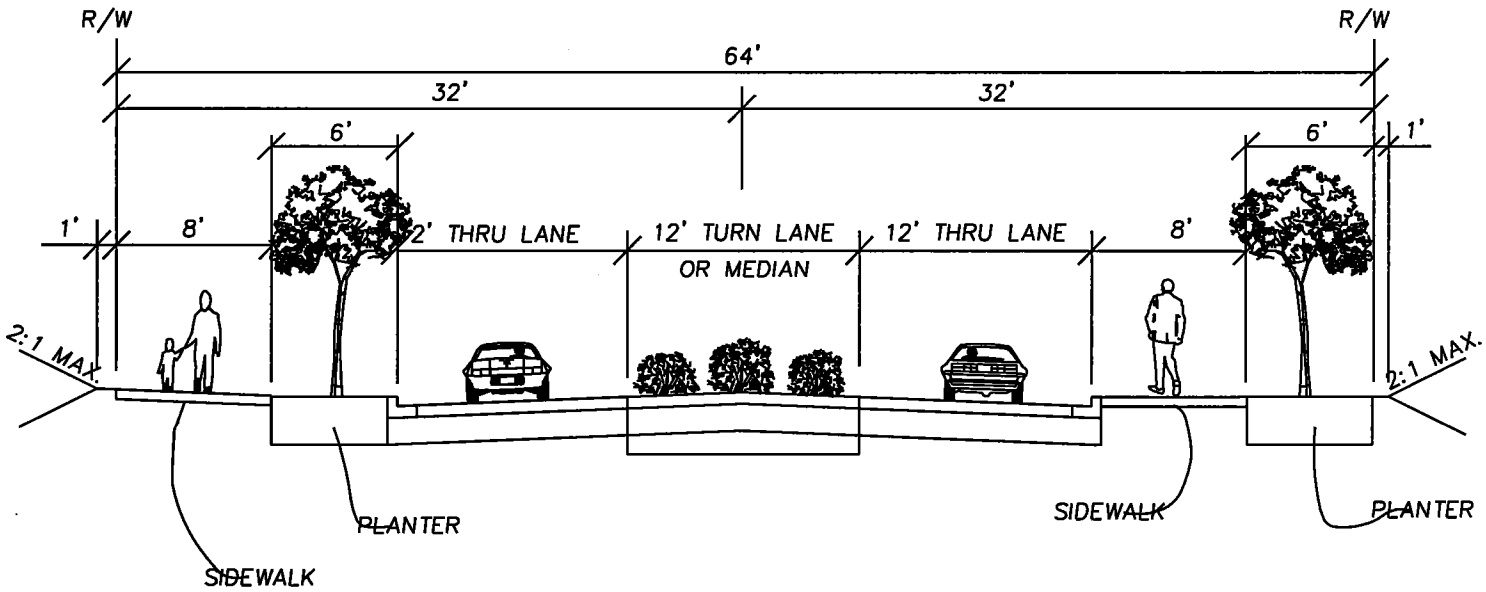

TREATMENT "A"
(PREFERRED)

TREATMENT "B"

NOTE:

1 TREATMENT "B" REQUIRES APPROVAL FROM PUBLIC WORKS DEPARTMENT

N.T.S.

City of Woodinville DEPARTMENT OF PUBLIC WORKS	TYPICAL ILLUSTRATION 3-LANE MINOR ARTERIAL STREETS	107A-1 revision date NOV, 98

3-LANE MINOR ARTERIAL STREETS
(WITH BIKE LANES)

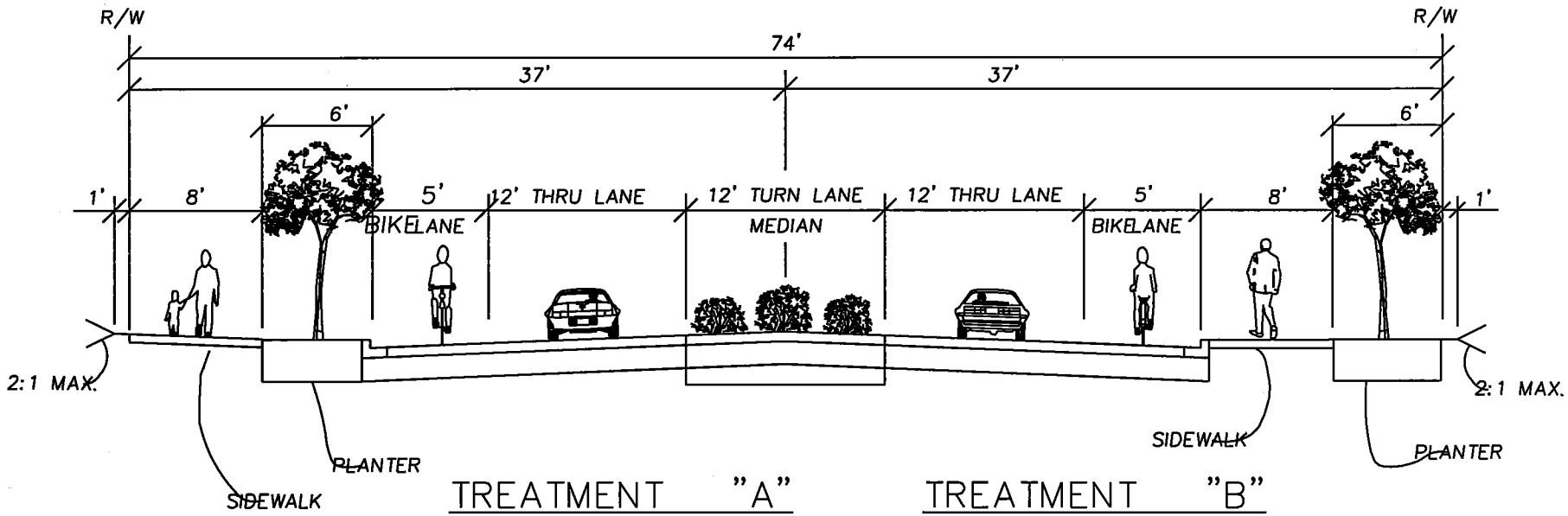

TREATMENT "A" (PREFERRED)

TREATMENT "B"

NOTE:

1 TREATMENT "B" REQUIRES APPROVAL FROM PUBLIC WORKS DEPARTMENT

N.T.S.

City of Woodinville DEPARTMENT OF PUBLIC WORKS	TYPICAL ILLUSTRATION 3-LANE MINOR ARTERIAL STREETS WITH BIKE LANES	107A-2 revision date NOV, 98

TREATMENT "A"

TREATMENT "B"

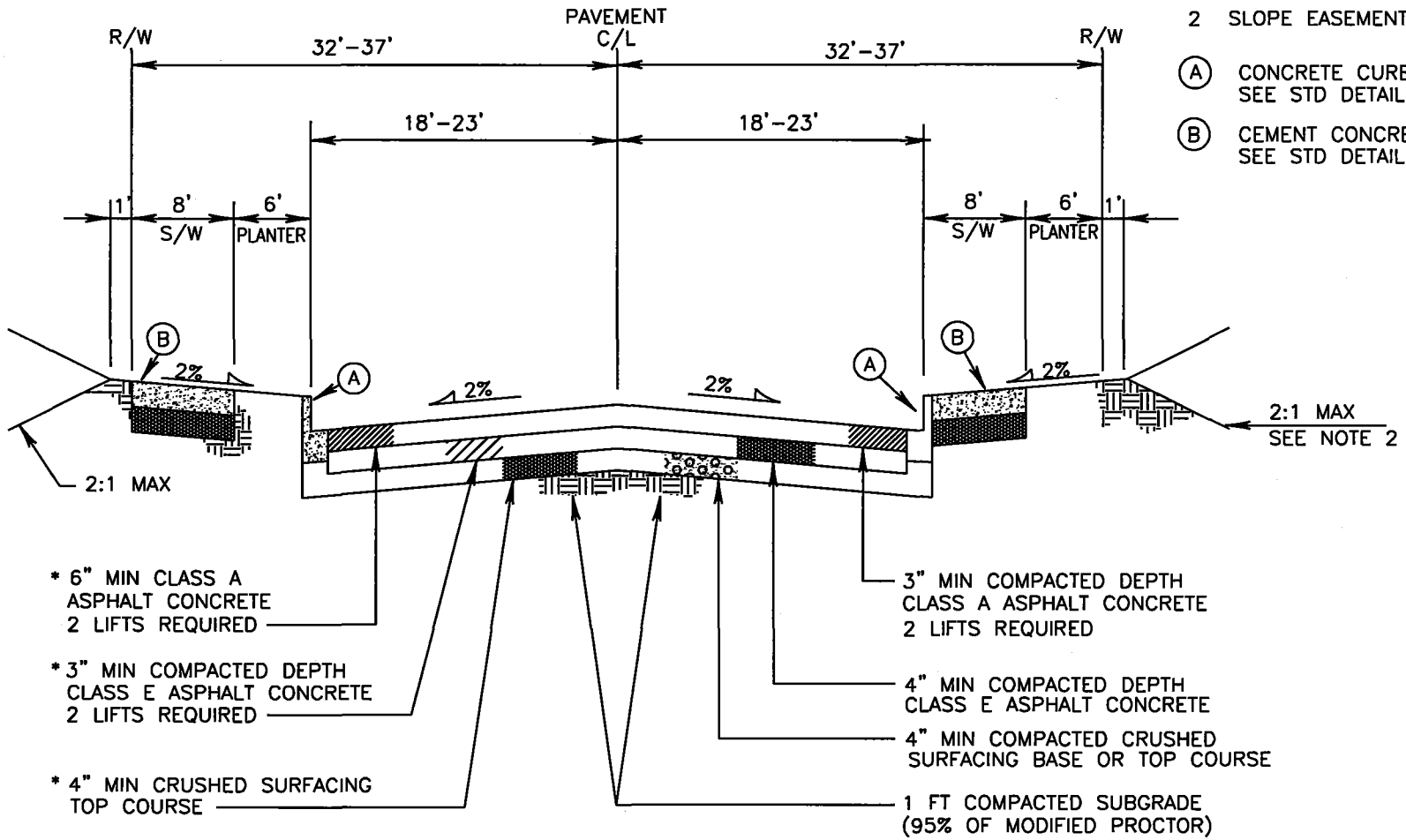

* ALTERNATE PAVEMENT SECTION

STANDARD PAVEMENT SECTION

NOTES:

1. SITE SPECIFIC PAVEMENT DESIGNS ARE REQUIRED. PAVEMENT SECTION SHOWN IS MINIMUM REQUIRED.
2. SLOPE EASEMENTS MAY BE REQUIRED

(A) CONCRETE CURB AND GUTTER TYPE A-1, SEE STD DETAIL 320A

(B) CEMENT CONCRETE SIDEWALK, SEE STD DETAIL 321

N.T.S.

City of Woodinville DEPARTMENT OF PUBLIC WORKS	TYPICAL ROADWAY SECTION 3-LANE MINOR ARTERIAL STREETS	107B revision date NOV, 98

3-LANE PRINCIPAL ARTERIAL STREETS

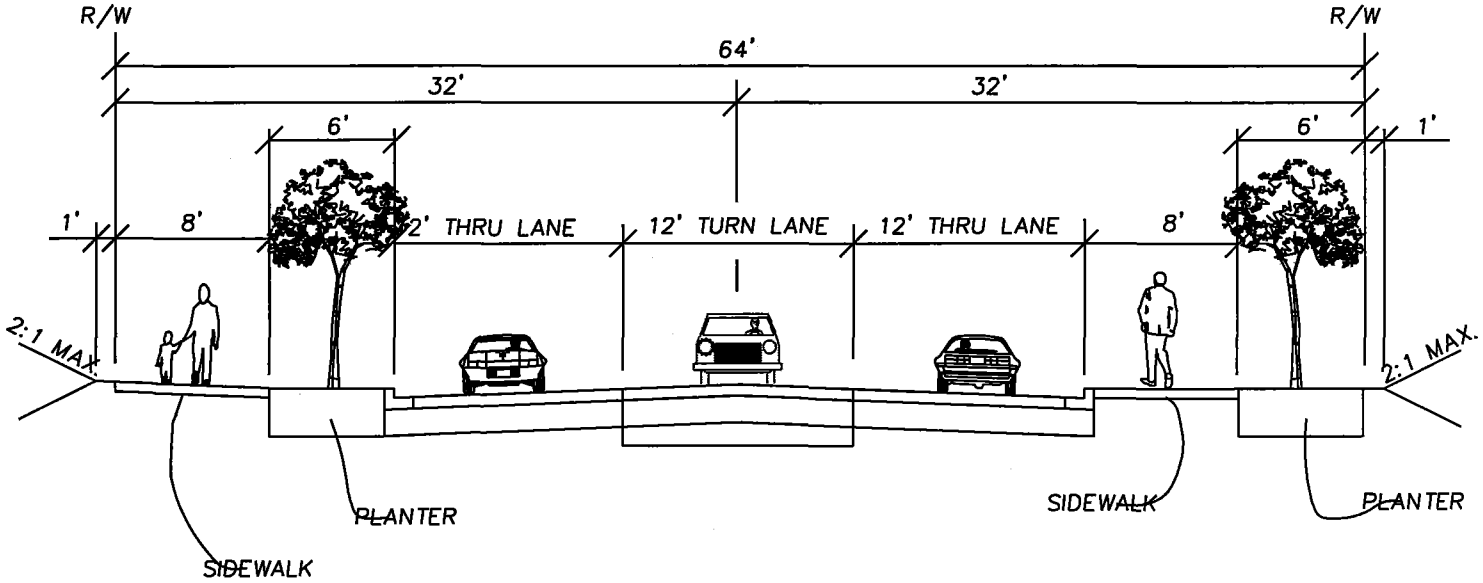

TREATMENT "A" (PREFERRED)

TREATMENT "B"

NOTE:

1 TREATMENT "B" REQUIRES APPROVAL FROM PUBLIC WORKS DEPARTMENT

N.T.S.

City of Woodinville DEPARTMENT OF PUBLIC WORKS	TYPICAL ILLUSTRATION 3-LANE PRINCIPAL ARTERIAL STREETS	108A-1 revision date NOV, 98

3-LANE PRINCIPAL ARTERIAL STREETS
(WITH BIKE LANES)

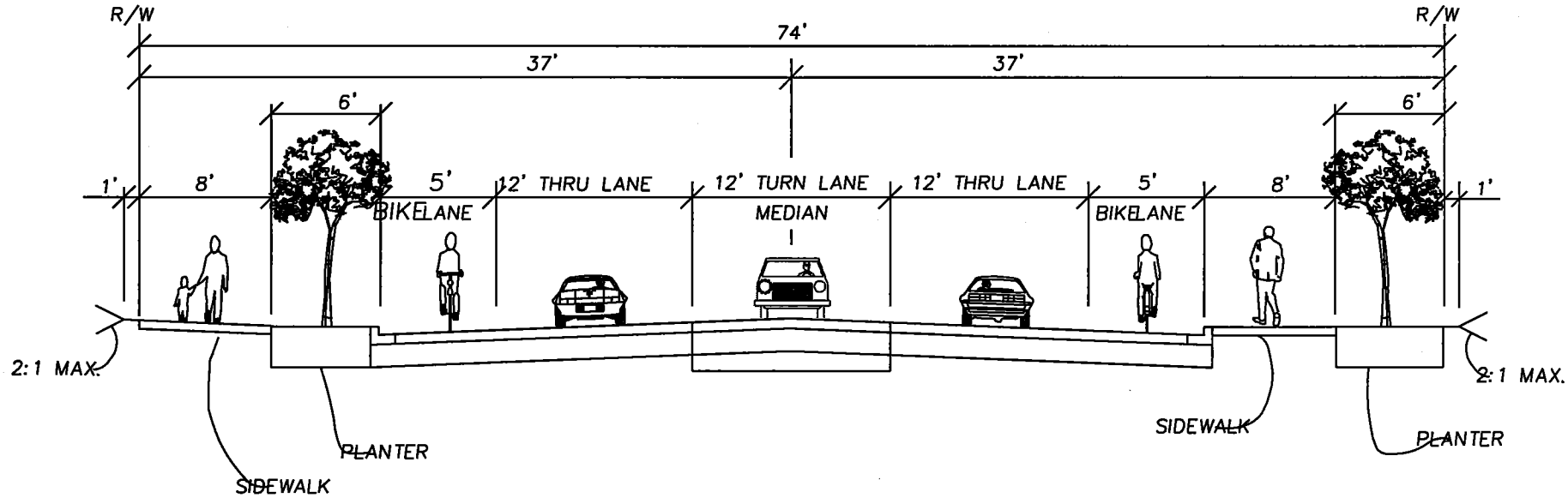

TREATMENT "A" (PREFERRED)

TREATMENT "B"

NOTE:

1 TREATMENT "B" REQUIRES APPROVAL FROM PUBLIC WORKS DEPARTMENT

N.T.S.

City of Woodinville DEPARTMENT OF PUBLIC WORKS	TYPICAL ILLUSTRATION 3-LANE PRINCIPAL ARTERIAL STREETS WITH BIKE LANES	108A-2 revision date NOV, 98

5-LANE PRINCIPAL ARTERIAL STREETS

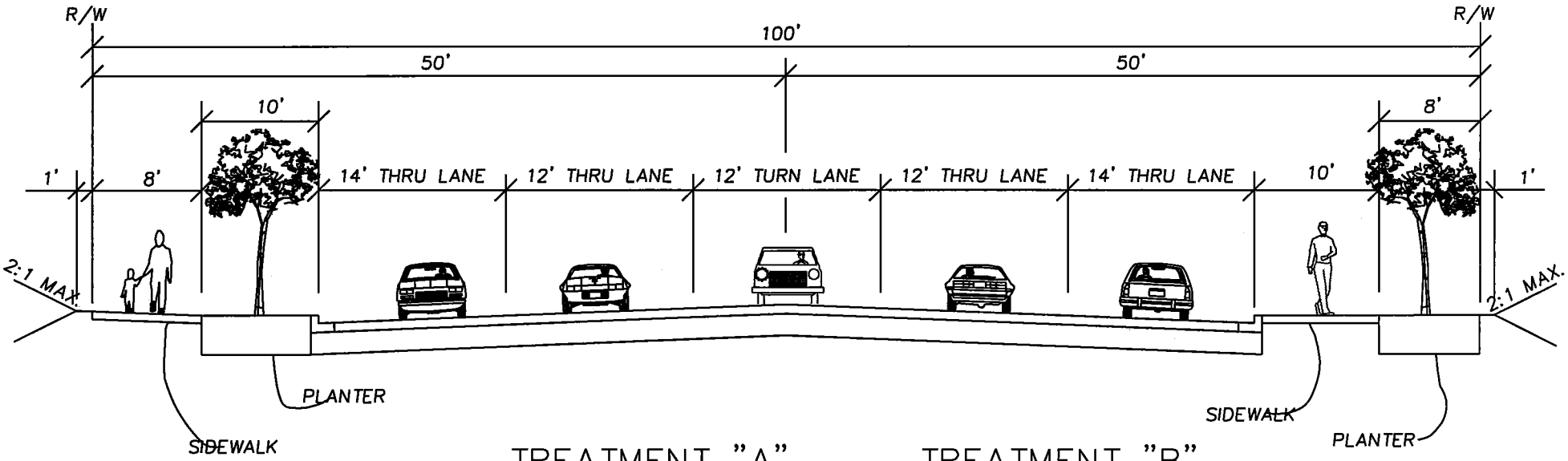

TREATMENT "A" (PREFERRED)

TREATMENT "B"

NOTE:

1 TREATMENT "B" REQUIRES APPROVAL FROM PUBLIC WORKS DEPARTMENT

N.T.S.

City of Woodinville DEPARTMENT OF PUBLIC WORKS	TYPICAL ILLUSTRATION 5-LANE PRINCIPAL ARTERIAL STREETS	109A-1 revision date NOV, 98

5-LANE PRINCIPAL ARTERIAL STREETS
(WITH BIKE LANES)

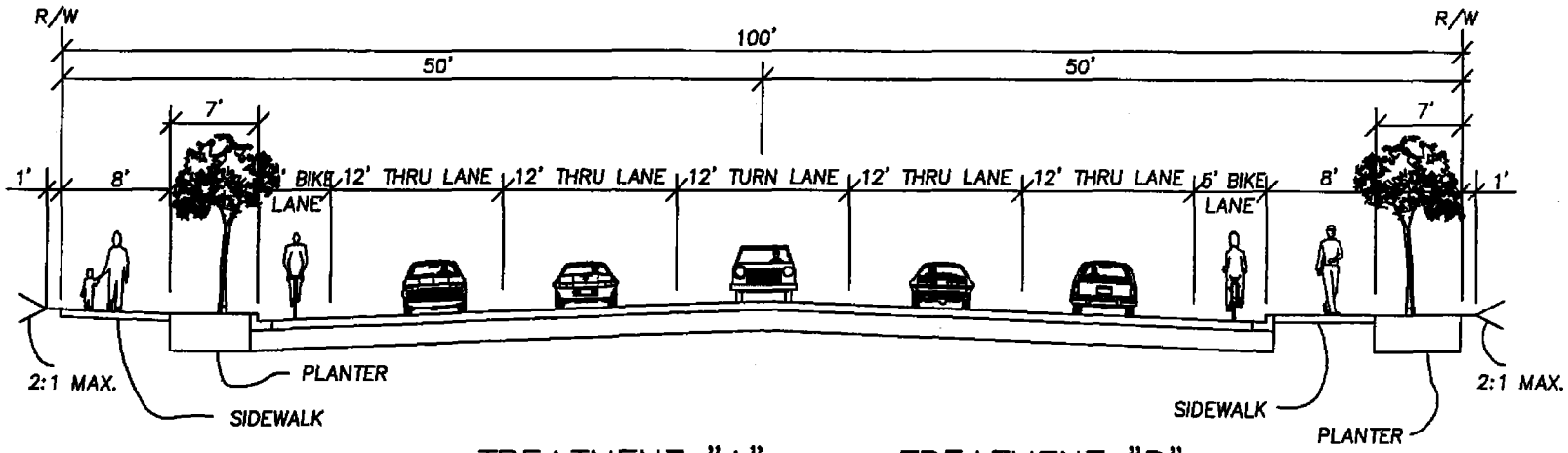

TREATMENT "A"
(PREFERRED)

TREATMENT "B"

NOTE:
1 TREATMENT "B" REQUIRES APPROVAL FROM PUBLIC WORKS DEPARTMENT

N.T.S.

City of Woodinville DEPARTMENT OF PUBLIC WORKS	TYPICAL ILLUSTRATION 5-LANE PRINCIPAL ARTERIAL STREETS WITH BIKE LANES	109A-2 revision date NOV. 98

NOTES:

1 SITE SPECIFIC PAVEMENT DESIGNS ARE REQUIRED. PAVEMENT SECTION SHOWN IS MINIMUM REQUIRED.

2 SLOPE EASEMENTS MAY BE REQUIRED (TYPICAL).

3 14' IF NO BIKE LANE IS REQUIRED, 17' IF BIKE LANE IS REQUIRED.

(A) CONCRETE CURB AND GUTTER TYPE A-1, SEE STD DETAIL 320A

(B) CEMENT CONCRETE SIDEWALK, SEE STD DETAIL 321

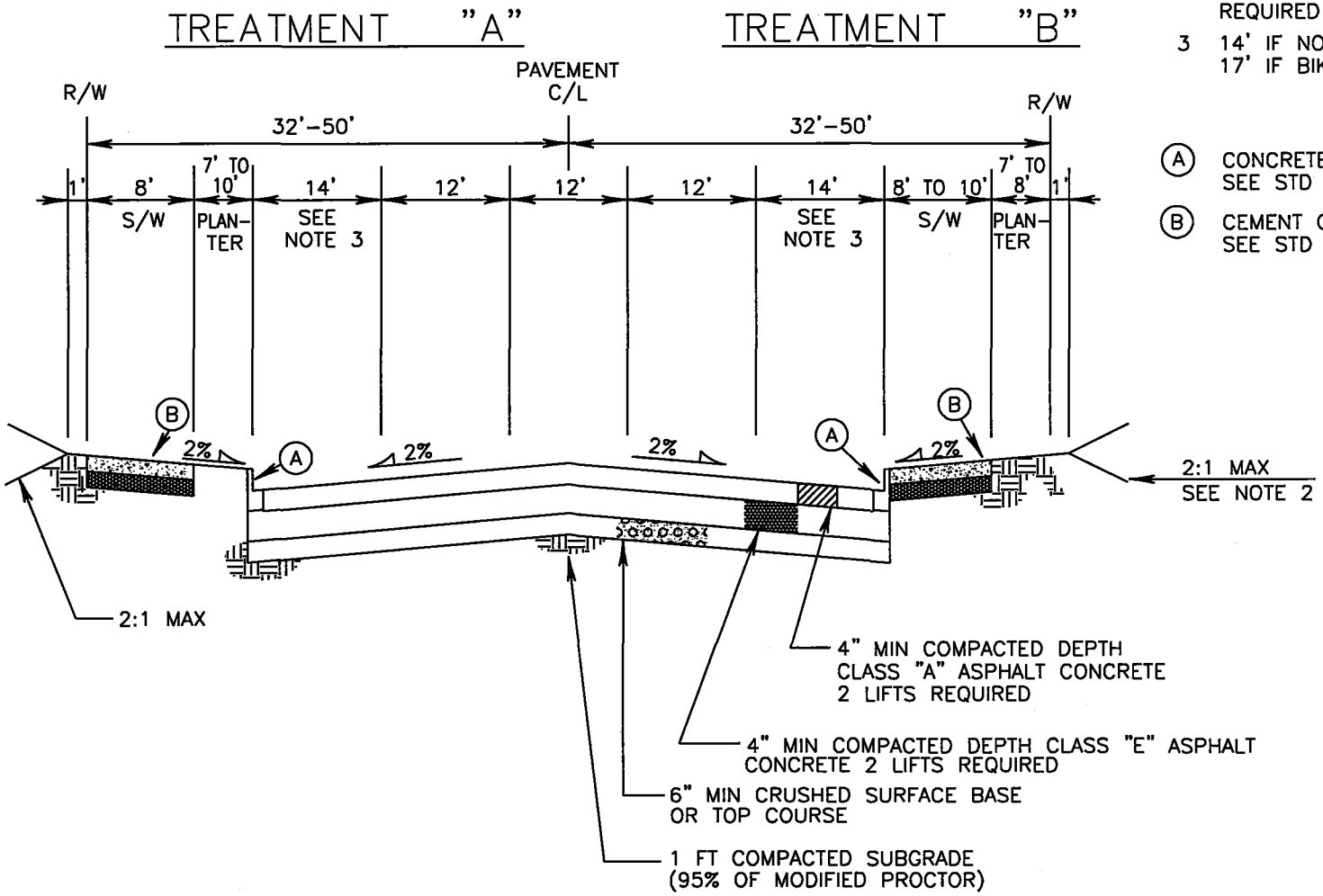

N.T.S.

City of Woodinville DEPARTMENT OF PUBLIC WORKS	TYPICAL ROADWAY SECTION PRINCIPAL ARTERIAL STREETS	109B revision date NOV, 98

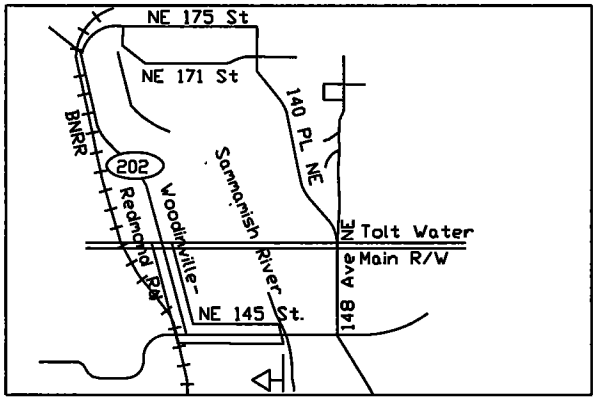

TOURIST DISTRICT STREET–A

(WEST OF THE SAMMAMISH RIVER)

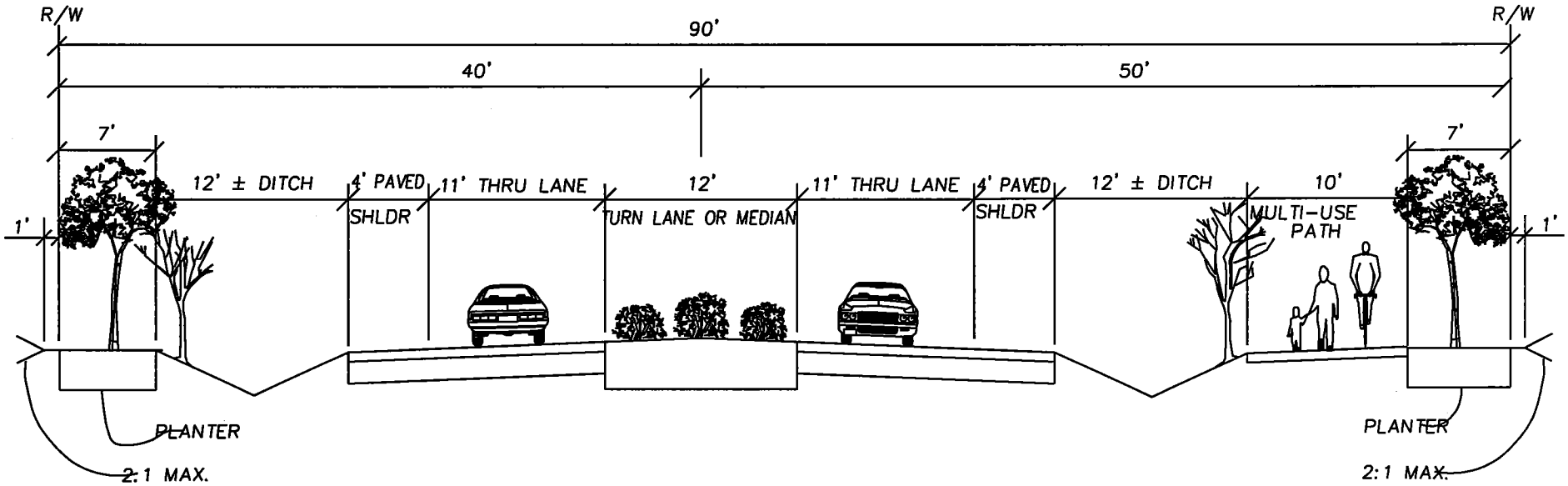

N.T.S.

City of Woodinville DEPARTMENT OF PUBLIC WORKS	TYPICAL ILLUSTRATION TOURIST DISTRICT STREET–A	110A–1 revision date NOV, 98

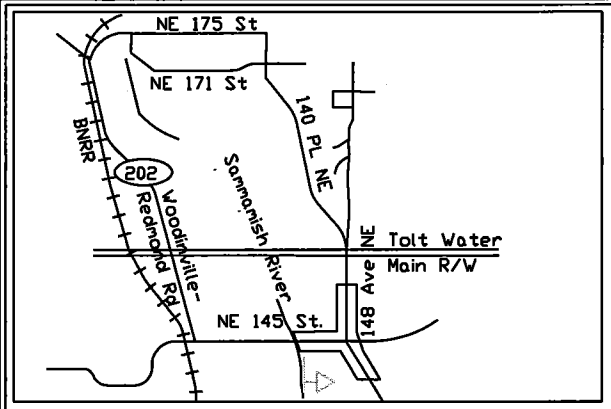

TOURIST DISTRICT STREET–B
(EAST OF THE SAMMAMISH RIVER)

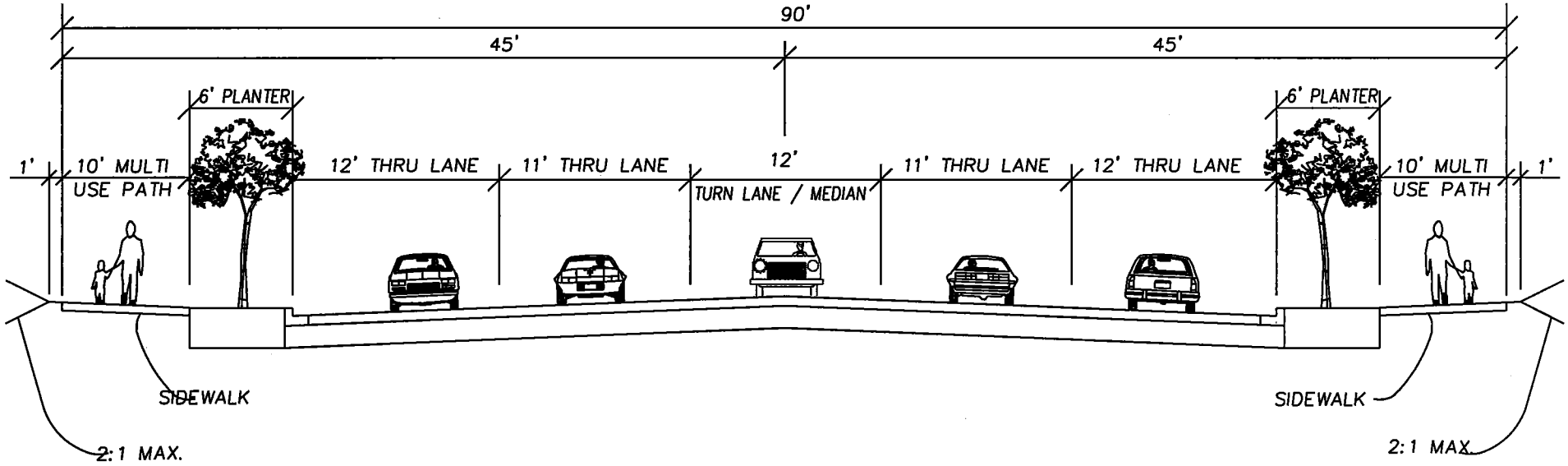

N.T.S.

City of Woodinville DEPARTMENT OF PUBLIC WORKS	TYPICAL ILLUSTRATION TOURIST DISTRICT STREET–B	110A–2 revision date NOV, 98

NOTES:

1 SITE SPECIFIC PAVEMENT DESIGNS ARE REQUIRED. PAVEMENT SECTION SHOWN IS MINIMUM REQUIRED.

(A) CEMENT CONCRETE CURB TYPE E-1 OR E-2

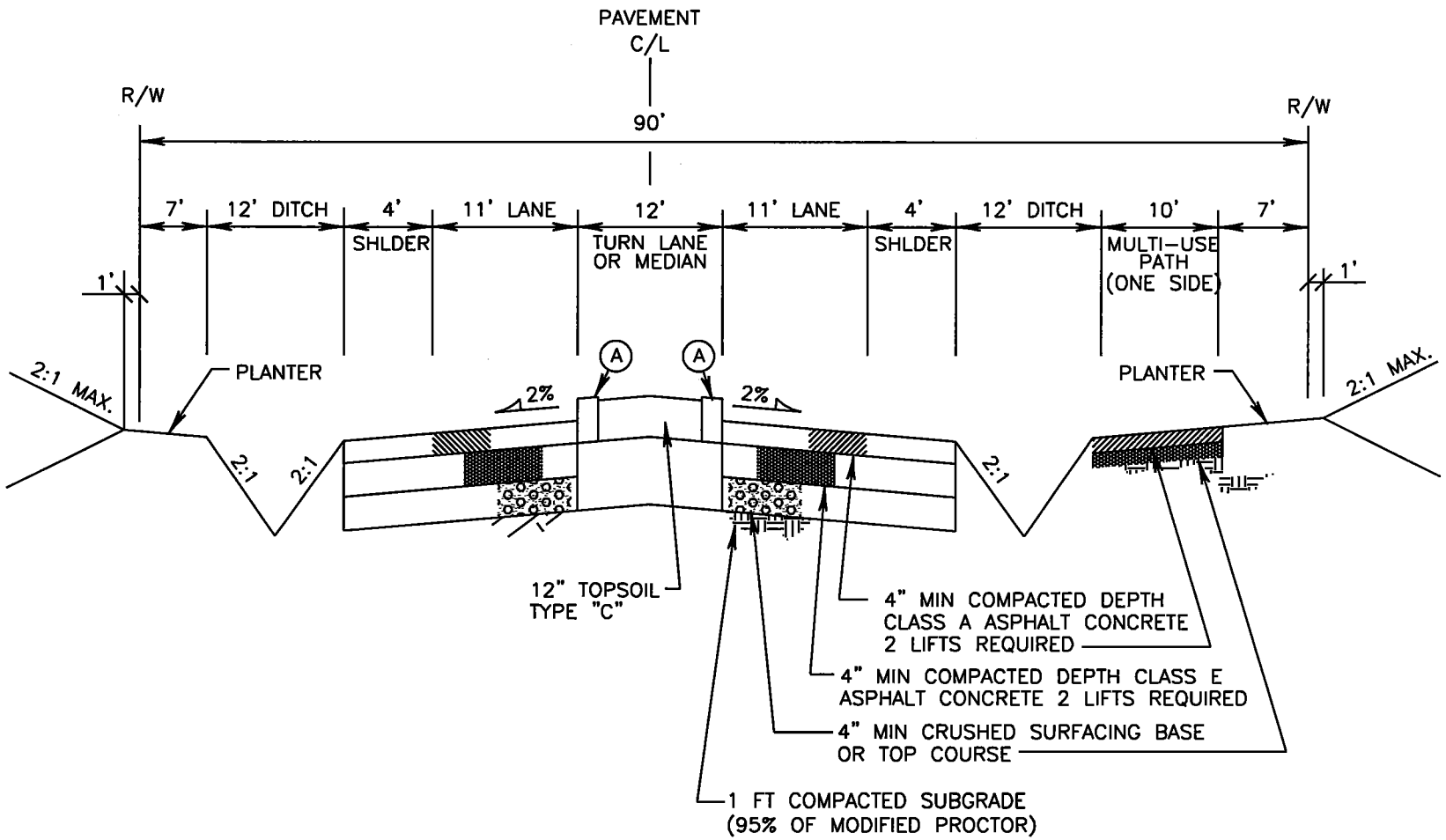

STANDARD PAVEMENT SECTION

N.T.S.

City of Woodinville DEPARTMENT OF PUBLIC WORKS	TYPICAL ROADWAY SECTION TOURIST DISTRICT STREET-A	110B-1 revision date NOV, 98

NOTES:

1 SITE SPECIFIC PAVEMENT DESIGNS ARE REQUIRED. PAVEMENT SECTION SHOWN IS MINIMUM REQUIRED.

2 SLOPE EASEMENTS MAY BE REQUIRED (TYPICAL).

3 14' IF NO BIKE LANE IS REQUIRED, 17' IF BIKE LANE IS REQUIRED.

(A) CONCRETE CURB AND GUTTER TYPE A-1, SEE STD DETAIL 320A

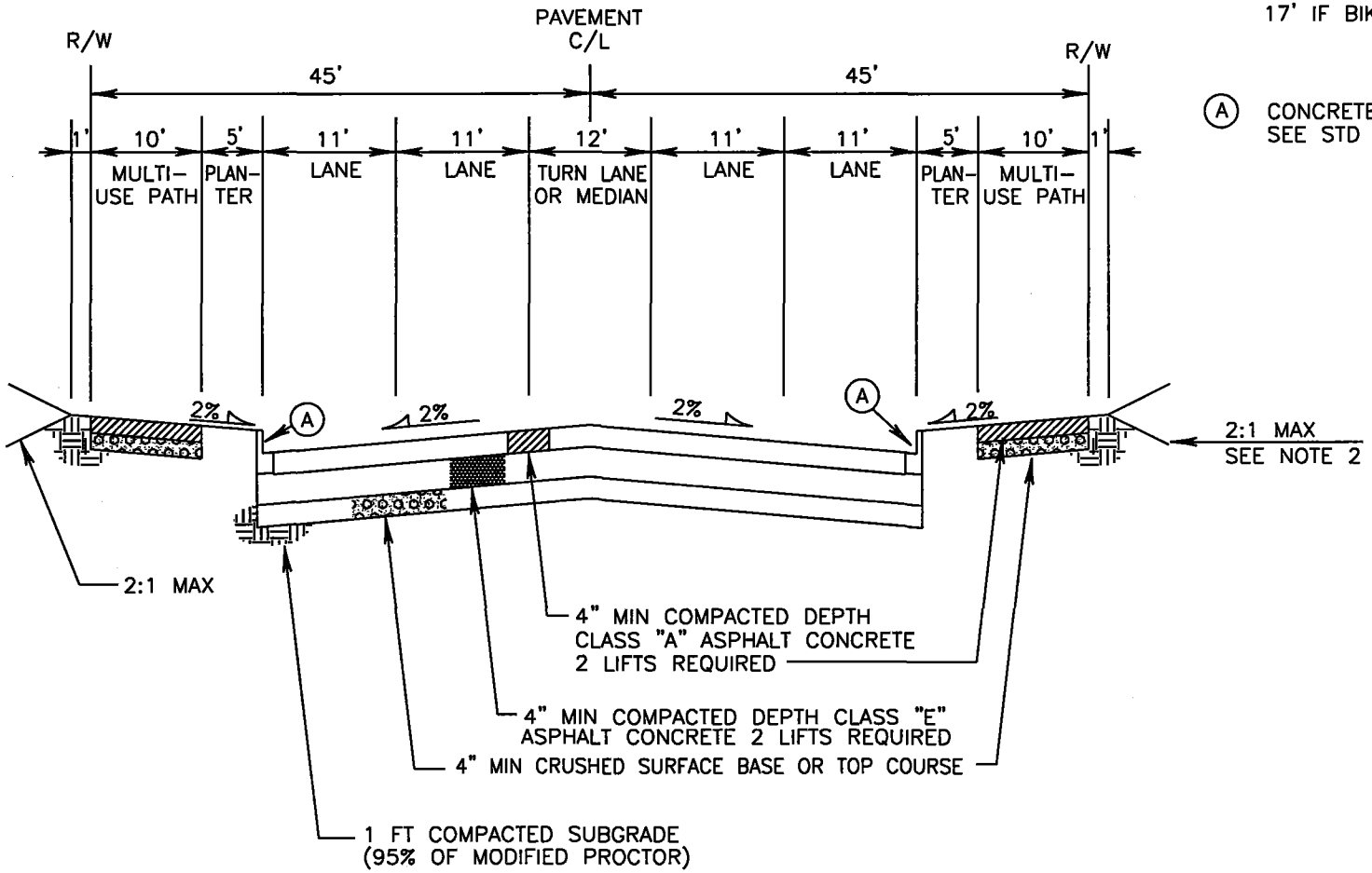

STANDARD PAVEMENT SECTION

N.T.S.

City of Woodinville DEPARTMENT OF PUBLIC WORKS	TYPICAL ROADWAY SECTION TOURIST DISTRICT STREET-B	110B-2 revision date JAN, 99

CENTRAL BUSINESS DISTRICT STREET–A

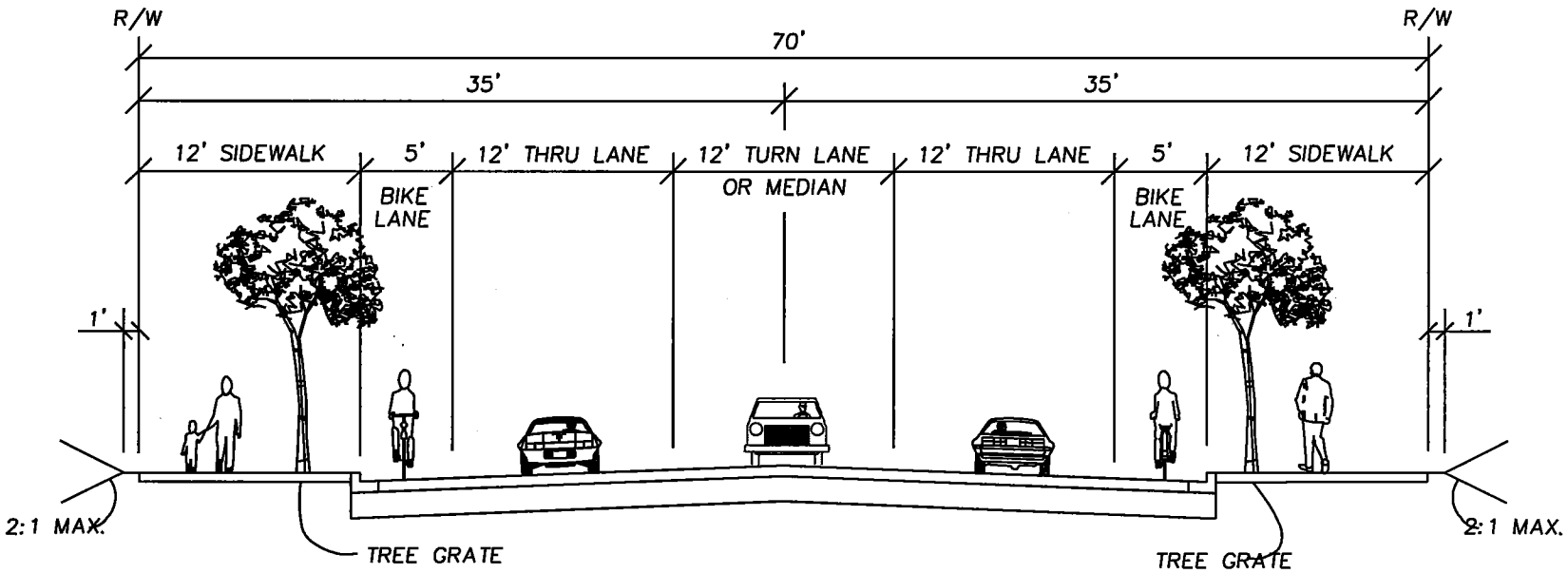

NOTE:

1 CONSULT WITH CITY PUBLIC WORKS AND "DESIGN PRINCIPLES" OF THE PLANNING DEPARTMENT FOR STREET FURNITURE.

2 INTENDED FOR CENTRAL BUSINESS DISTRICT (CBD) NE 175TH STREET, APPLICATION TO OTHER CBD STREETS TO BE AS DIRECTED BY THE PUBLIC WORKS DIRECTOR.

N.T.S.

City of Woodinville DEPARTMENT OF PUBLIC WORKS	TYPICAL ILLUSTRATION CENTRAL BUSINESS DISTRICT STREET–A	111A revision date NOV, 98

NOTES:

1 SITE SPECIFIC PAVEMENT DESIGNS ARE REQUIRED FOR CENTRAL BUSINESS DISTRICT STREETS. PAVEMENT SECTION SHOWN IS MINIMUM ANTICIPATED.

2 SLOPE EASEMENTS MAY BE REQUIRED.

3 SIDEWALK SHALL BE CEMENT CONCRETE SIDEWALK, BRICK PAVERS OR STAMPED COLORED CEMENT CONCRETE AS DIRECTED BY THE PUBLIC WORKS DIRECTOR.

(A) CONCRETE CURB AND GUTTER TYPE A-1, SEE STD DETAIL 320A

(B) CEMENT CONCRETE SIDEWALK, SEE STD DETAIL 321 (SEE NOTE 3)

(C) TREE GRATE IN CEMENT CONCRETE SIDEWALK (4' x 6')

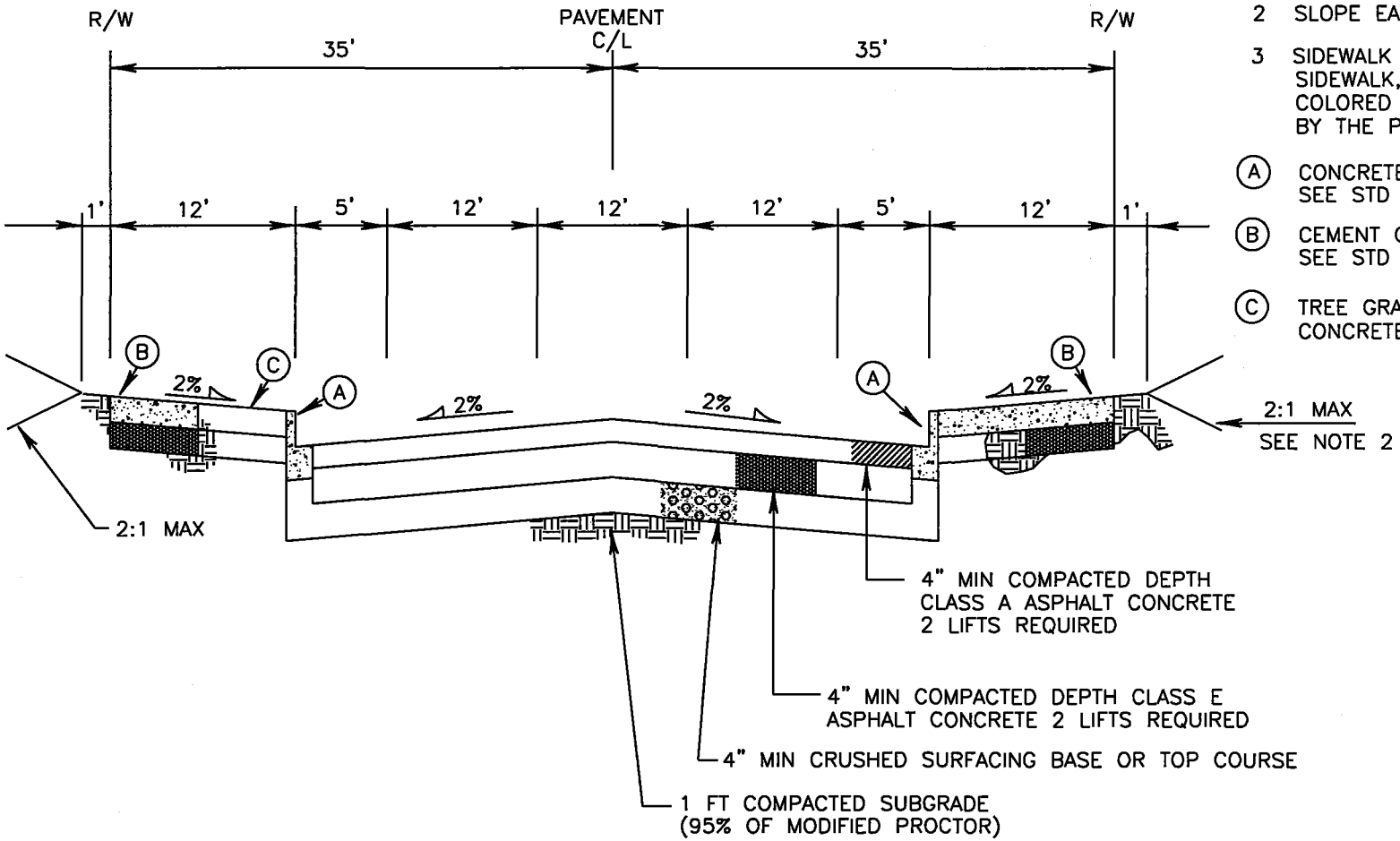

STANDARD PAVEMENT SECTION

N.T.S.

City of Woodinville DEPARTMENT OF PUBLIC WORKS	TYPICAL ROADWAY SECTION CENTRAL BUSINESS DISTRICT STREET-A	111B revision date NOV, 98

CENTRAL BUSINESS DISTRICT STREET–B

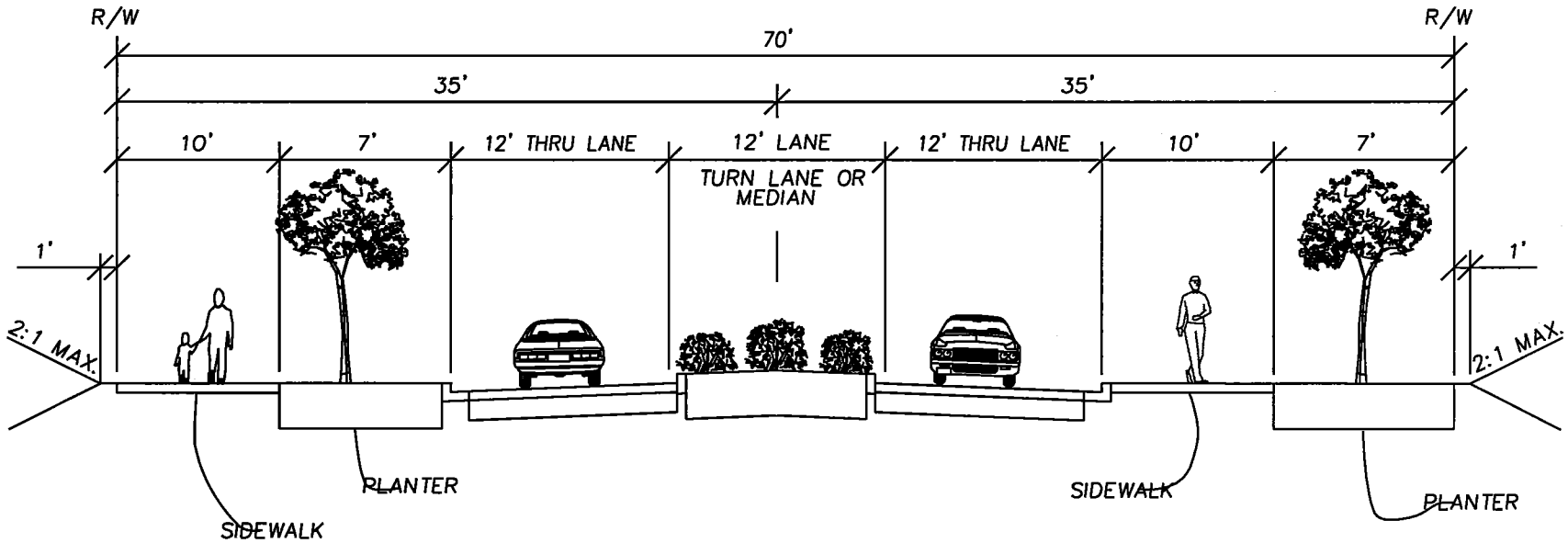

TREATMENT "A"
(PREFERRED)

TREATMENT "B"

NOTE:
1 TREATMENT "B" REQUIRES APPROVAL FROM PUBLIC WORKS DEPARTMENT

N.T.S.

City of Woodinville DEPARTMENT OF PUBLIC WORKS	TYPICAL ILLUSTRATION CENTRAL BUSINESS DISTRICT STREET–B	112A revision date NOV, 98

TREATMENT "A" TREATMENT "B"

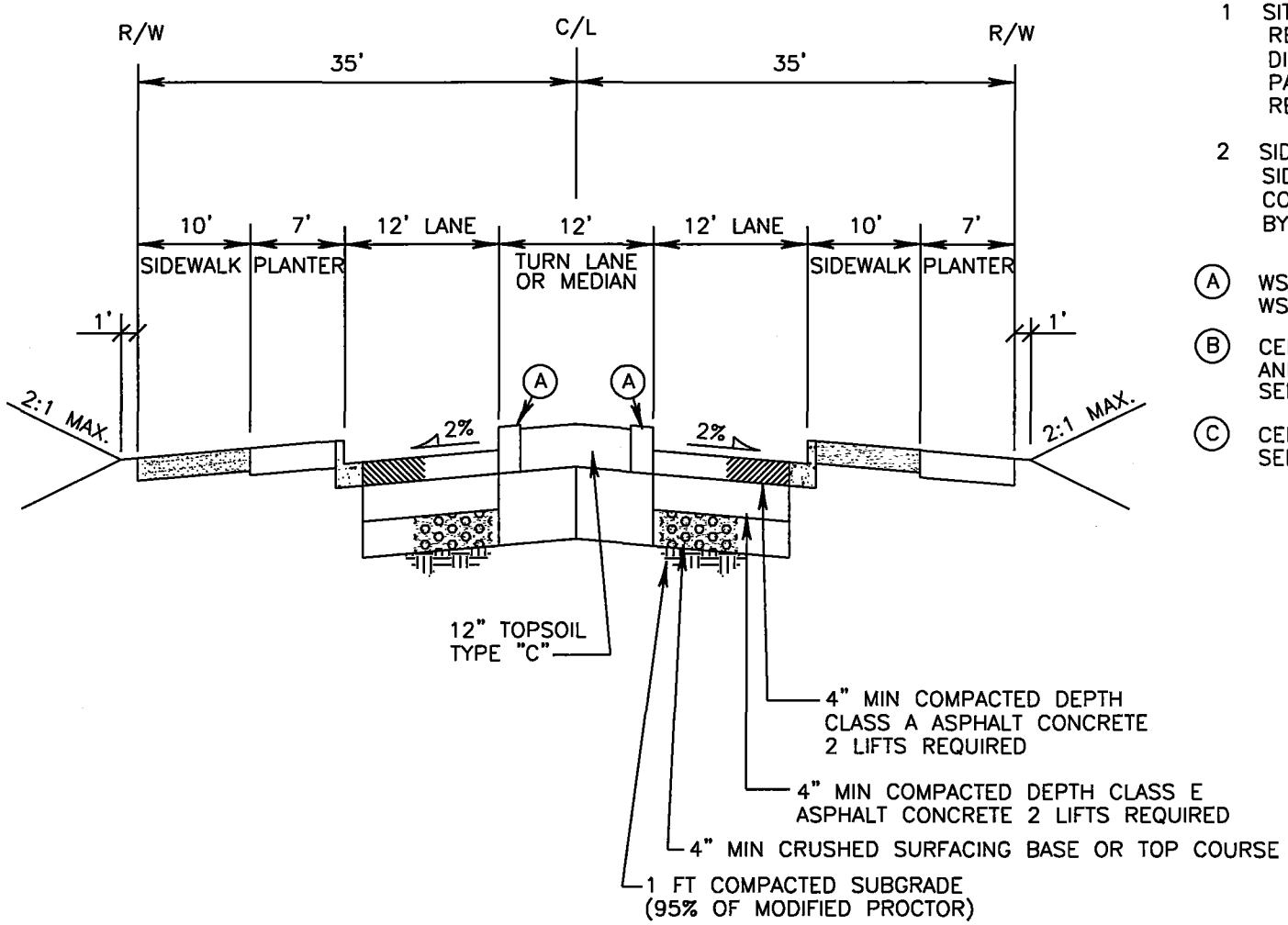

STANDARD PAVEMENT SECTION

NOTE:

1. SITE SPECIFIC PAVEMENT DESIGNS ARE REQUIRED FOR CENTRAL BUSINESS DISTRICT OR DOWNTOWN STREETS. PAVEMENT SECTION SHOWN IS MINIMUM REQUIRED.
2. SIDEWALK SHALL BE CEMENT CONCRETE SIDEWALK, BRICK PAVERS OR STAMPED COLORED CEMENT CONCRETE AS DIRECTED BY THE PUBLIC WORKS DIRECTOR.

(A) WSDOT CEMENT CONCRETE BARRIER CURB WSDOT STANDARD PLAN F-1.

(B) CEMENT CONCRETE CURB AND GUTTER, TYPE A-1 SEE STD DETAIL 320A

(C) CEMENT CONCRETE SIDEWALK SEE STD. DETAIL 321 (SEE NOTE 2)

N.T.S.

City of Woodinville DEPARTMENT OF PUBLIC WORKS	TYPICAL ROADWAY SECTION CENTRAL BUSINESS DISTRICT STREET-B	112B revision date NOV, 98

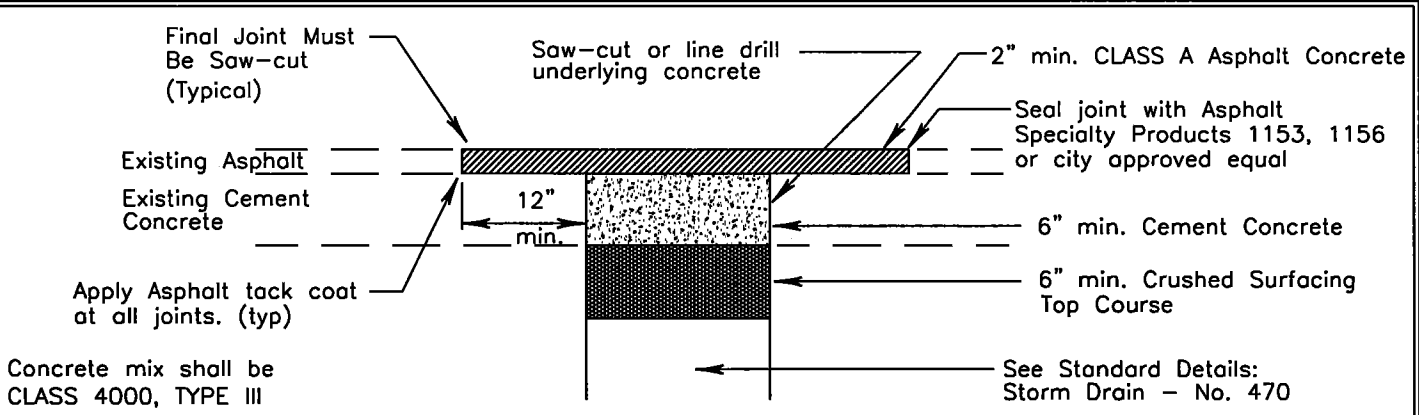

EXISTING ASPHALT CONCRETE OVER CEMENT CONCRETE

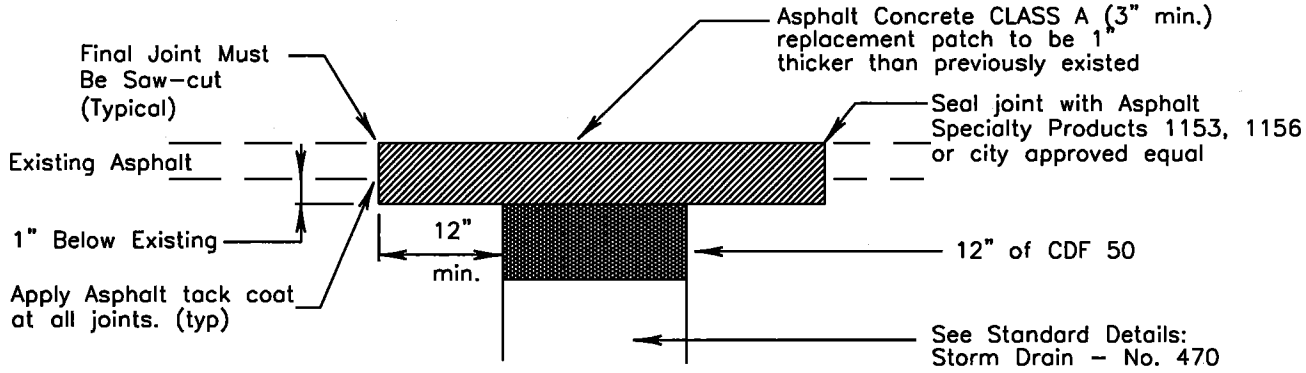

EXISTING ASPHALT CONCRETE OVER PREPARED GRADE

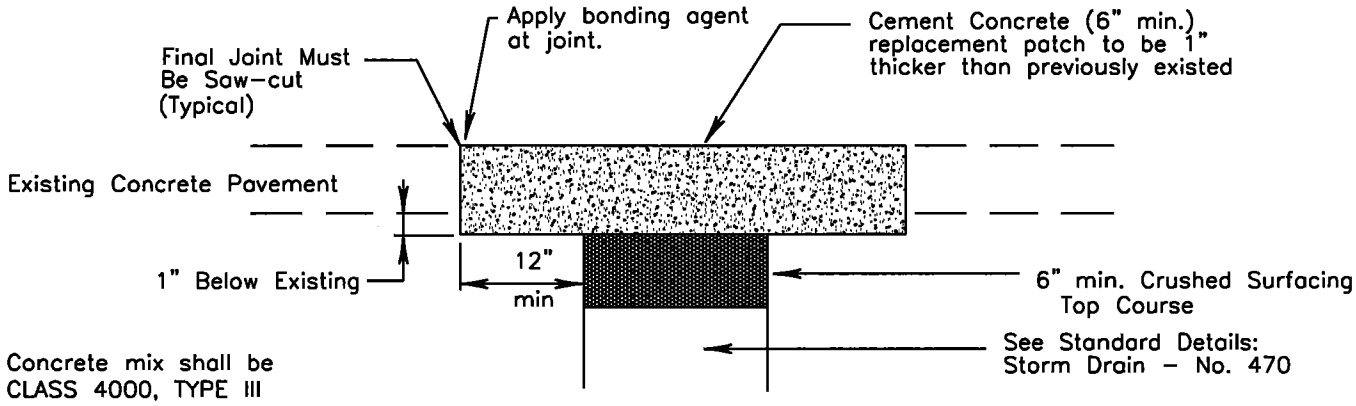

EXISTING CEMENT CONCRETE OVER PREPARED GRADE

NOTES:

1 ALL TRENCHES IN ROADWAY AREAS SHALL BE BACKFILLED AND PATCHED WITH TEMPORARY ASPHALT AT THE END OF EACH WORK DAY, UNLESS PERMISSION IS GRANTED TO DO OTHERWISE BY THE PUBLIC WORKS DIRECTOR.

2 ALL TEMPORARY PATCHES ON TRENCHES SHALL BE PERMANENTLY PATCHED WITHIN 7 WORKING DAYS OF COMPLETION OF WORK WITHIN THE ROADWAY AREA.

N.T.S.

City of Woodinville DEPARTMENT OF PUBLIC WORKS	PAVEMENT PATCHING DETAILS	300A revision date NOV, 98

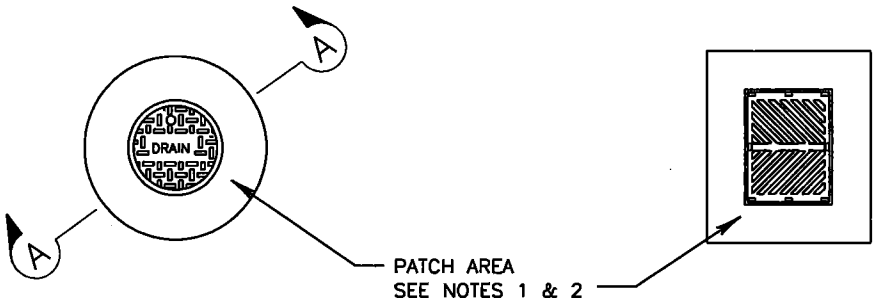

PLAN

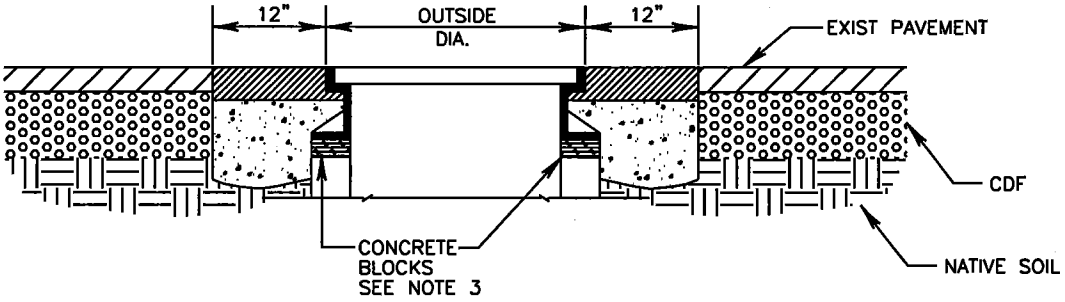

SECTION A–A

MANHOLE & CATCHBASIN ADJUSTMENT

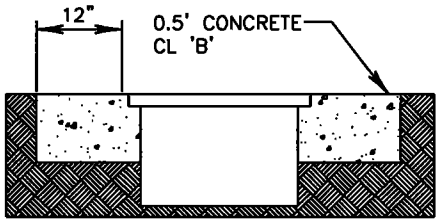

OUTSIDE PAVED AREA

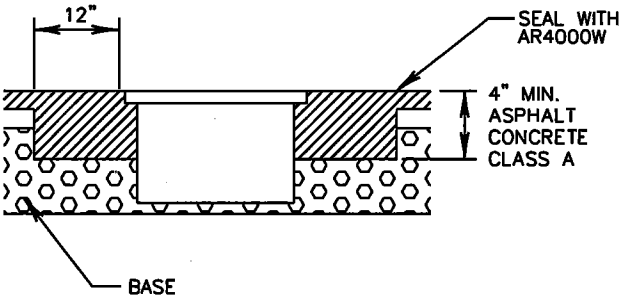

INSIDE PAVED AREA

VALVE BOX ADJUSTMENT

NOTES:

1 REMOVE PAVEMENT AND BASE MATERIALS FOR A DISTANCE WHICH IS EQUAL TO THE DIAMETER OF THE FRAME PLUS TWO FEET. ADJUST CASTING FRAME TO NEW PAVEMENT SURFACE USING CONCRETE BLOCKS.

2 ASPHALT CONCRETE CLASS A (3" MIN.) REPLACEMENT PATCH TO BE 1" THICKER THAN PREVIOUSLY EXISTED. THE REST OF THE BACKFILL TO BE CONTROLLED DENSITY FILL.

3 2"x4"x8" SOLID BRICK USED FOR FINAL ADJUSTMENT TO GRADE. 6" HIGH MAX.

City of Woodinville DEPARTMENT OF PUBLIC WORKS	MANHOLE/CATCHBASIN AND VALVE BOX ADJUSTMENT	300B revision date NOV, 98

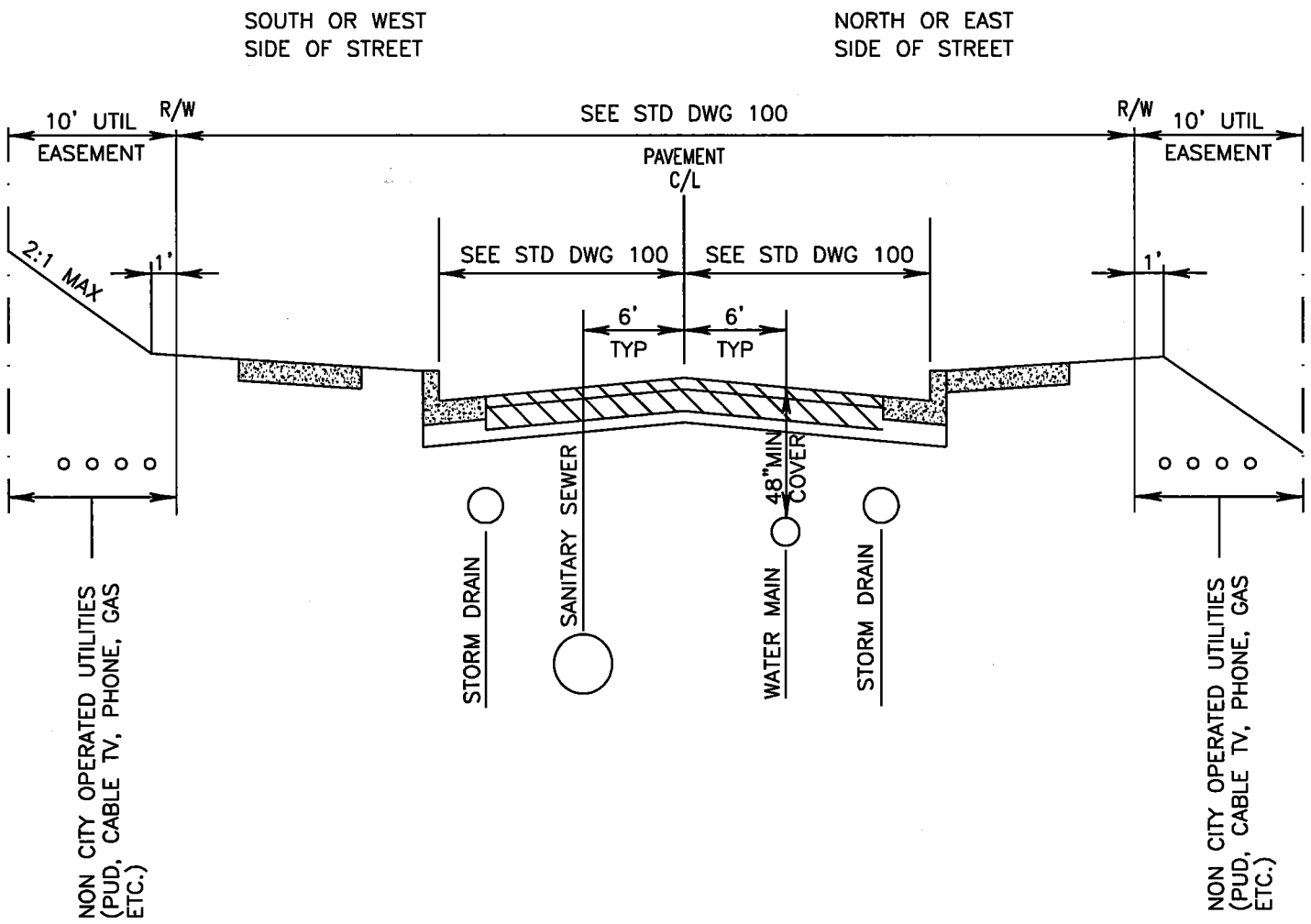

NOTES:

1 A 5 FT MIN VERTICAL AND HORIZONTAL SEPARATION IS REQUIRED BETWEEN ALL PUBLIC UTILITIES, AND BETWEEN A PUBLIC AND PRIVATE UTILITY.

2 MINIMUM SEPARATION REQUIREMENTS FROM PUBLIC UTILITIES APPLY WITHIN EASEMENTS AND PRIVATE PROPERTY.

N.T.S.

City of Woodinville DEPARTMENT OF PUBLIC WORKS	TYPICAL UTILITY LOCATION	302 revision date NOV, 98

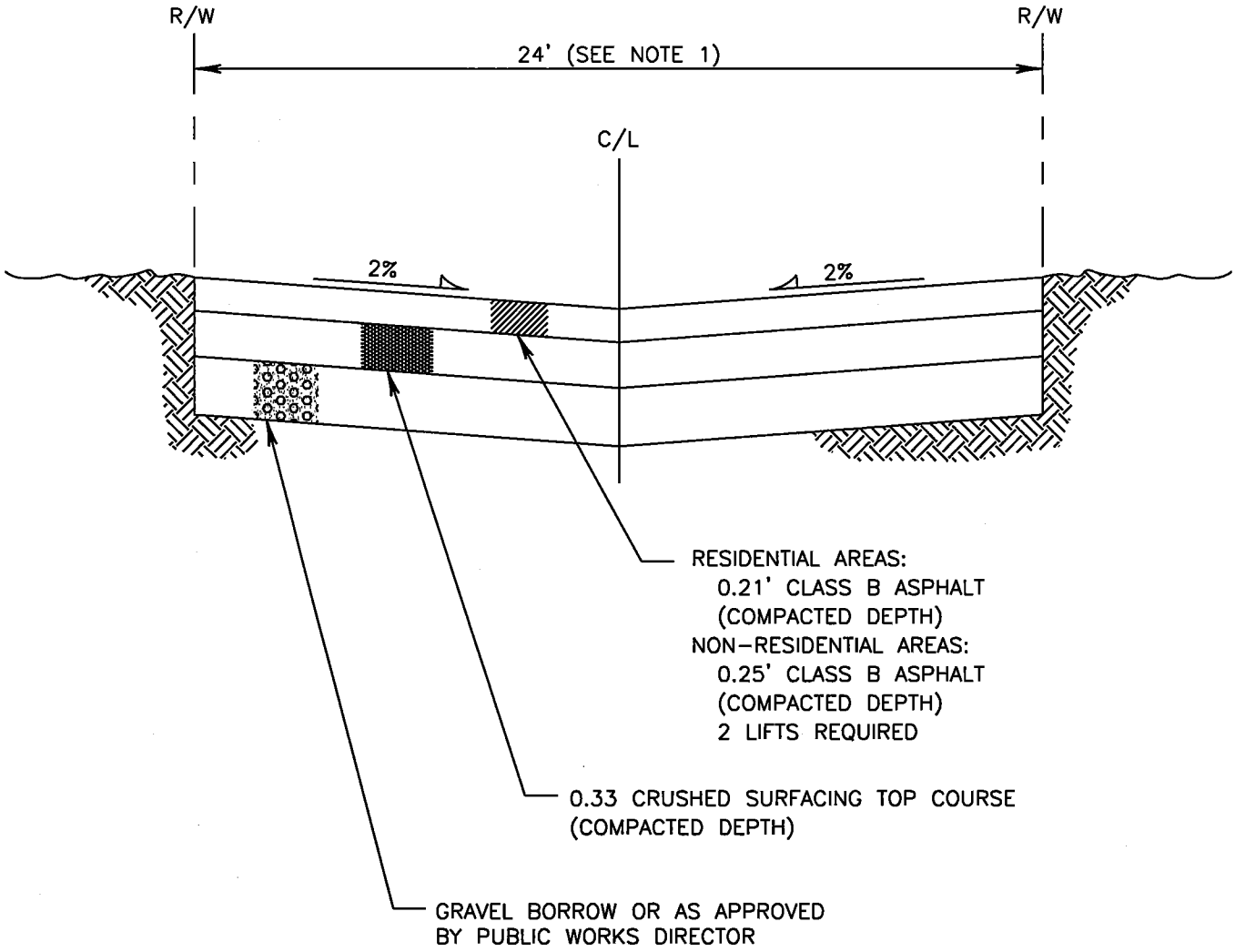

NOTES:

1 ALL NEW ALLEYS SHALL HAVE A MINIMUM WIDTH OF 24'. EXISTING ALLEY RIGHTS-OF-WAY MAY VARY FROM 12' TO 24'.

2 DRAINAGE TO BE COLLECTED AT LOW END OF IMPROVED SECTION WITH CATCH BASIN CONNECTED TO STORM DRAINAGE SYSTEM.

3 COMPACTION TESTS ON SUBGRADE AND TOP OF ROCK WILL BE REQUIRED. THE NUMBER OF TESTS SHALL BE AT THE DISCRETION OF THE PWD. ALL TESTING SHALL BE THROUGH A LICENSED TESTING LABORATORY. THE MINIMUM COMPACTION SHALL BE 95% OF MAXIMUM DENSITY OF BOTH SUBGRADE AND TOP OF ROCK.

4 ADJUSTMENT OF CATCH BASIN LIDS AND GRATES, MONUMENT CASES, VALVE BOXES, ETC., SHALL BE THE RESPONSIBILITY OF THE APPLICANT OR CONTRACTOR AS REQUIRED.

N.T.S.

City of Woodinville DEPARTMENT OF PUBLIC WORKS	TYPICAL ROADWAY SECTION ALLEY	313 revision date NOV, 98

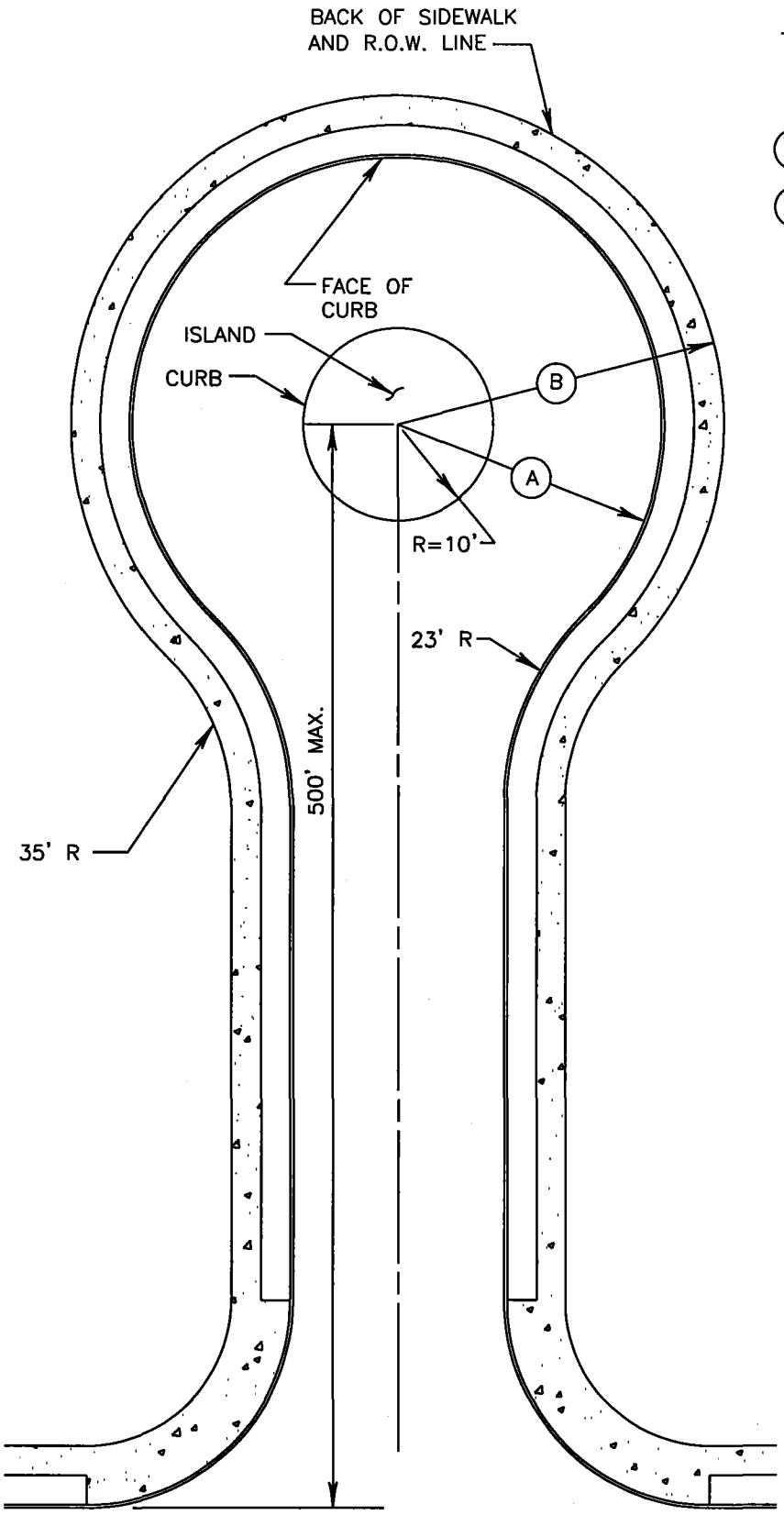

NOTES:

1 ISLAND IS MANDATORY.

(A) 45' MIN.

(B) 57' MIN.

N.T.S.

City of Woodinville DEPARTMENT OF PUBLIC WORKS	TYPICAL CUL-DE-SAC RESIDENTIAL STREETS	314 revision date JAN, 99

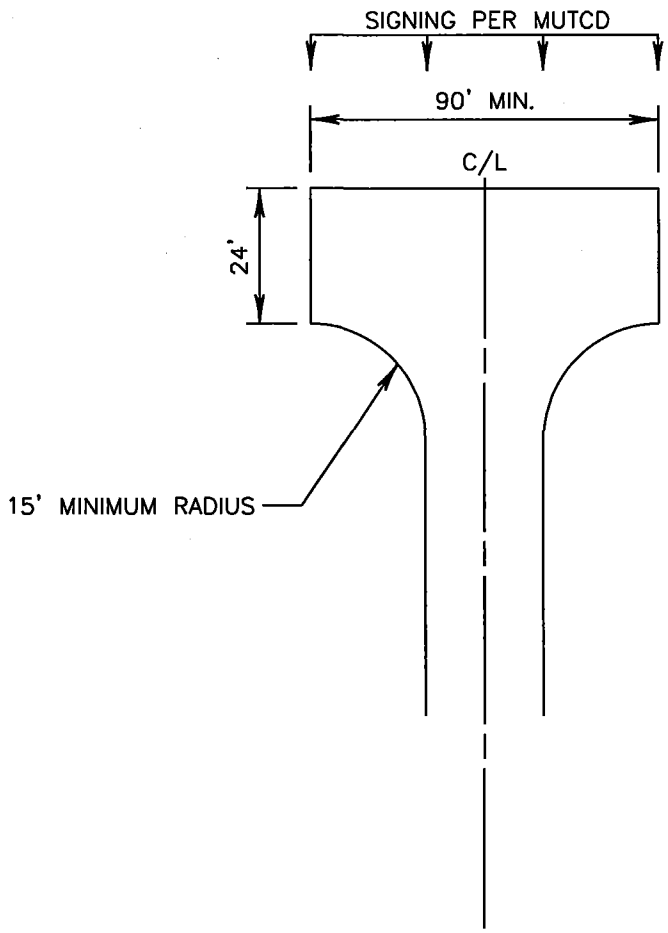

"HAMMERHEAD"

N.T.S.

City of Woodinville DEPARTMENT OF PUBLIC WORKS	TYPICAL "HAMMERHEAD" RESIDENTIAL STREETS	314A revision date NOV, 98

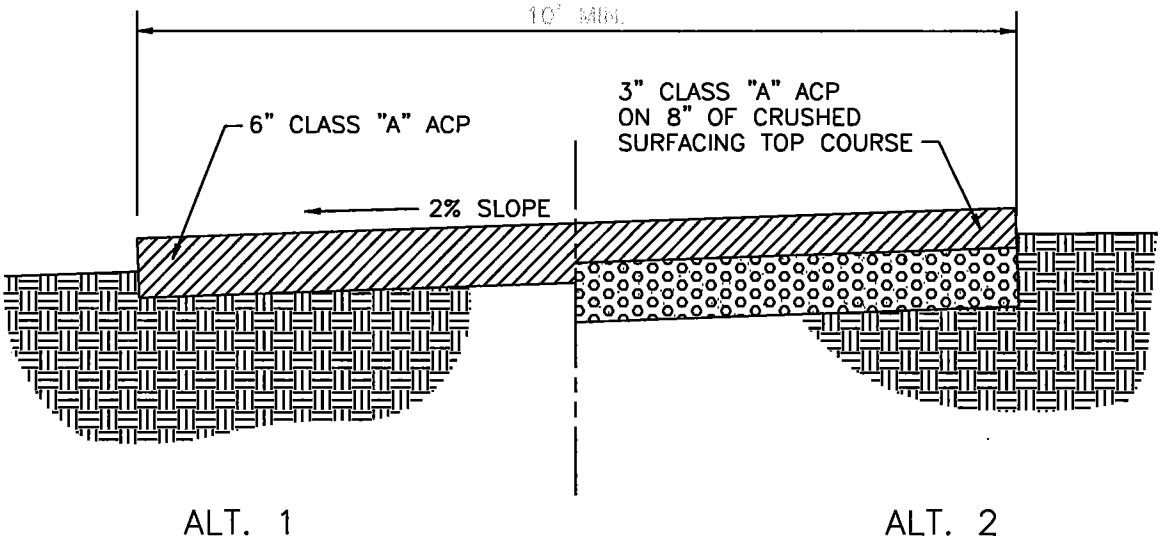

MAINTENANCE ACCESS ROAD

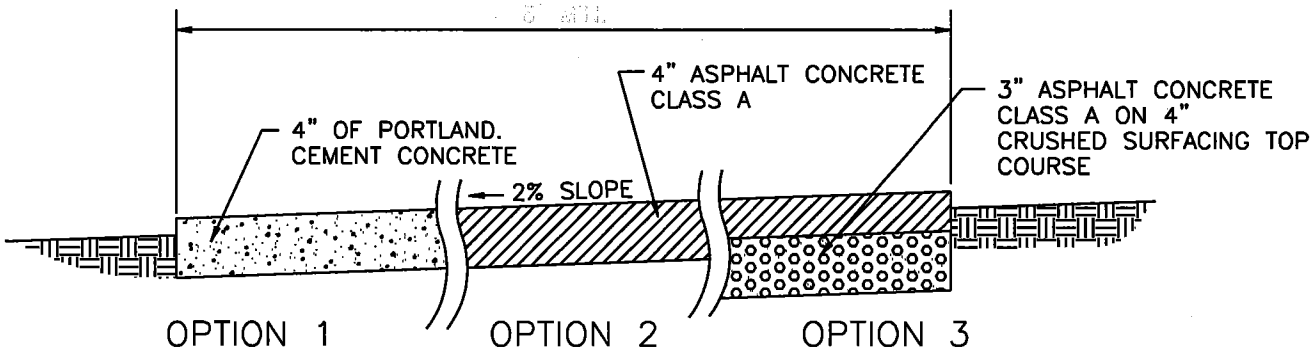

PEDESTRIAN PATH/BIKEWAY

CLASS I

NOTE:

1 MATERIAL IS SUBJECT TO PUBLIC WORKS DIRECTORS APPROVAL AND SHALL BE CONSISTENT WITH THE OVERALL PLANS OF THE CITY FOR PED/BIKE FACILITIES.

2 STERILIZE SUBGRADE AND COMPACT TO 95%.

3 CONCRETE SHALL BE 3000 P.S.I. AT 7 DAYS, 6 SACK MIX, SLUMP RANGE OF 3"–4".

N.T.S.

City of Woodinville DEPARTMENT OF PUBLIC WORKS	MAINTENANCE ACCESS & PEDESTRIAN PATH/BIKEWAY CLASS – I	315A revision date NOV, 98

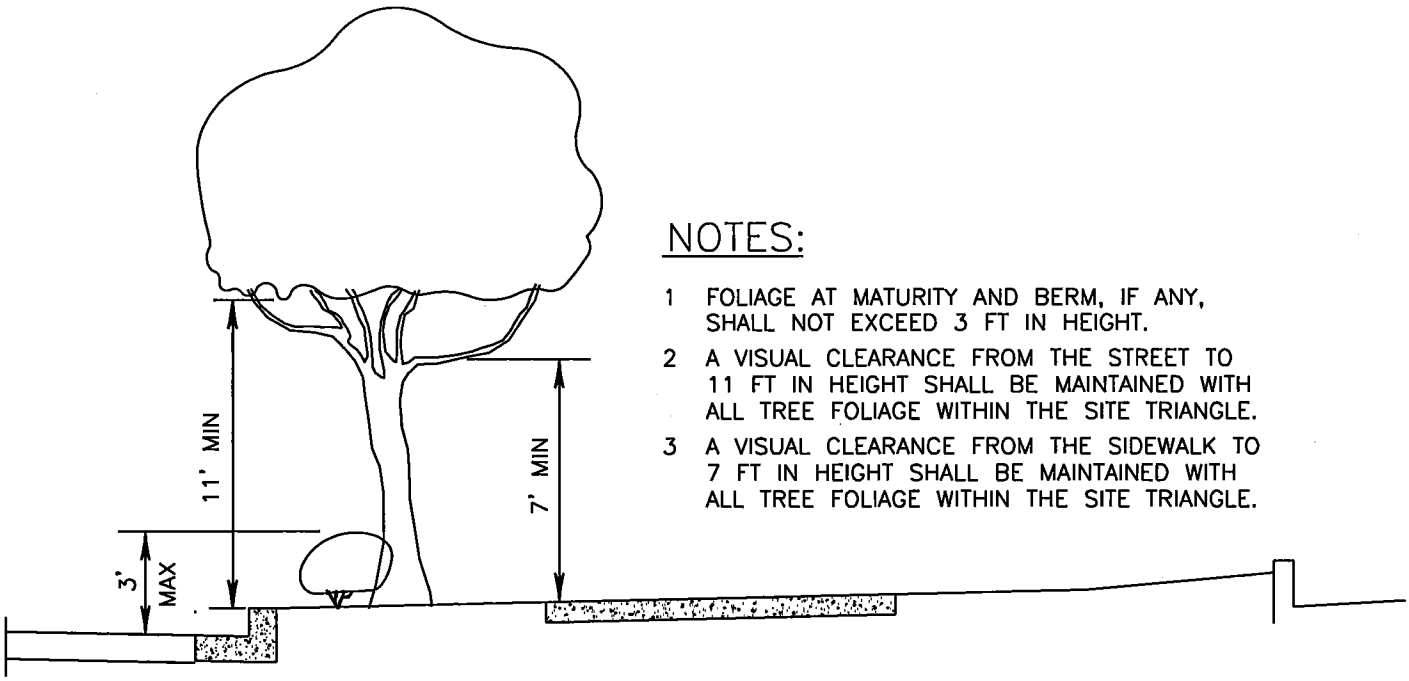

NOTES:

1. FOLIAGE AT MATURITY AND BERM, IF ANY, SHALL NOT EXCEED 3 FT IN HEIGHT.
2. A VISUAL CLEARANCE FROM THE STREET TO 11 FT IN HEIGHT SHALL BE MAINTAINED WITH ALL TREE FOLIAGE WITHIN THE SITE TRIANGLE.
3. A VISUAL CLEARANCE FROM THE SIDEWALK TO 7 FT IN HEIGHT SHALL BE MAINTAINED WITH ALL TREE FOLIAGE WITHIN THE SITE TRIANGLE.

AASHTO

POSTED SPEED LIMIT (MPH)	DESIGN SPEED (MPH)	MINIMUM X (DISTANCE (FT)
25	30	200'
30	35	250'
35	40	325'
40	45	400'
45	50	475'
50	55	550'
55	60	650'

PUBLIC STREET

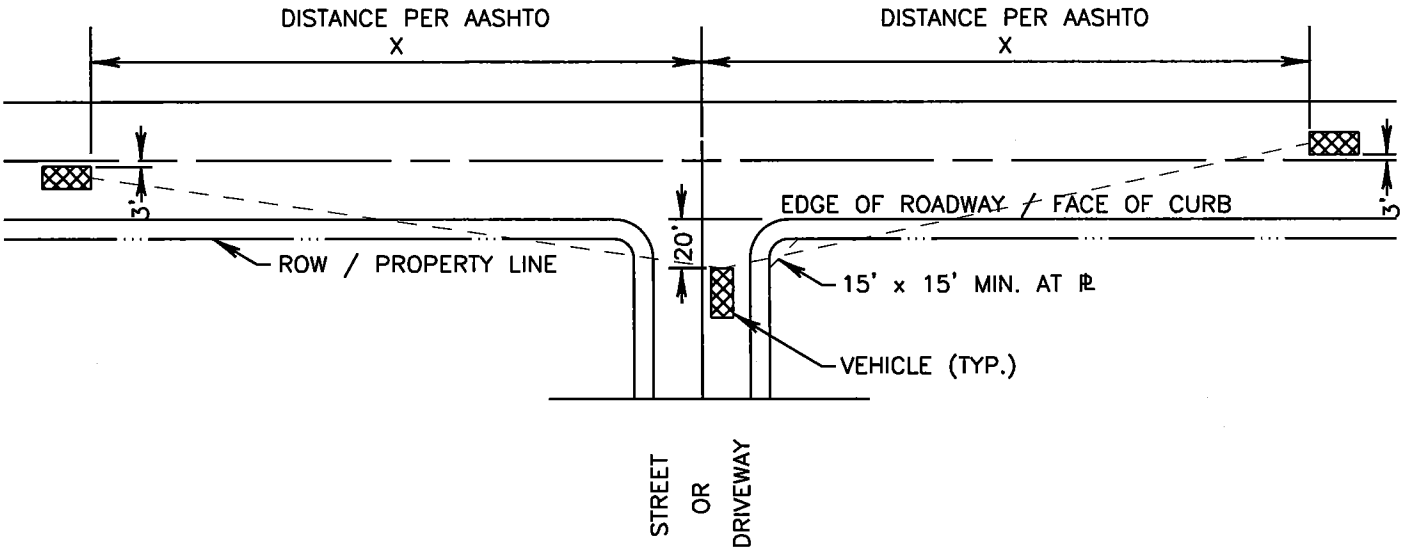

N.T.S.

City of Woodinville DEPARTMENT OF PUBLIC WORKS	DRIVEWAY & INTERSECTION SITE TRIANGLES	316 revision date NOV, 98

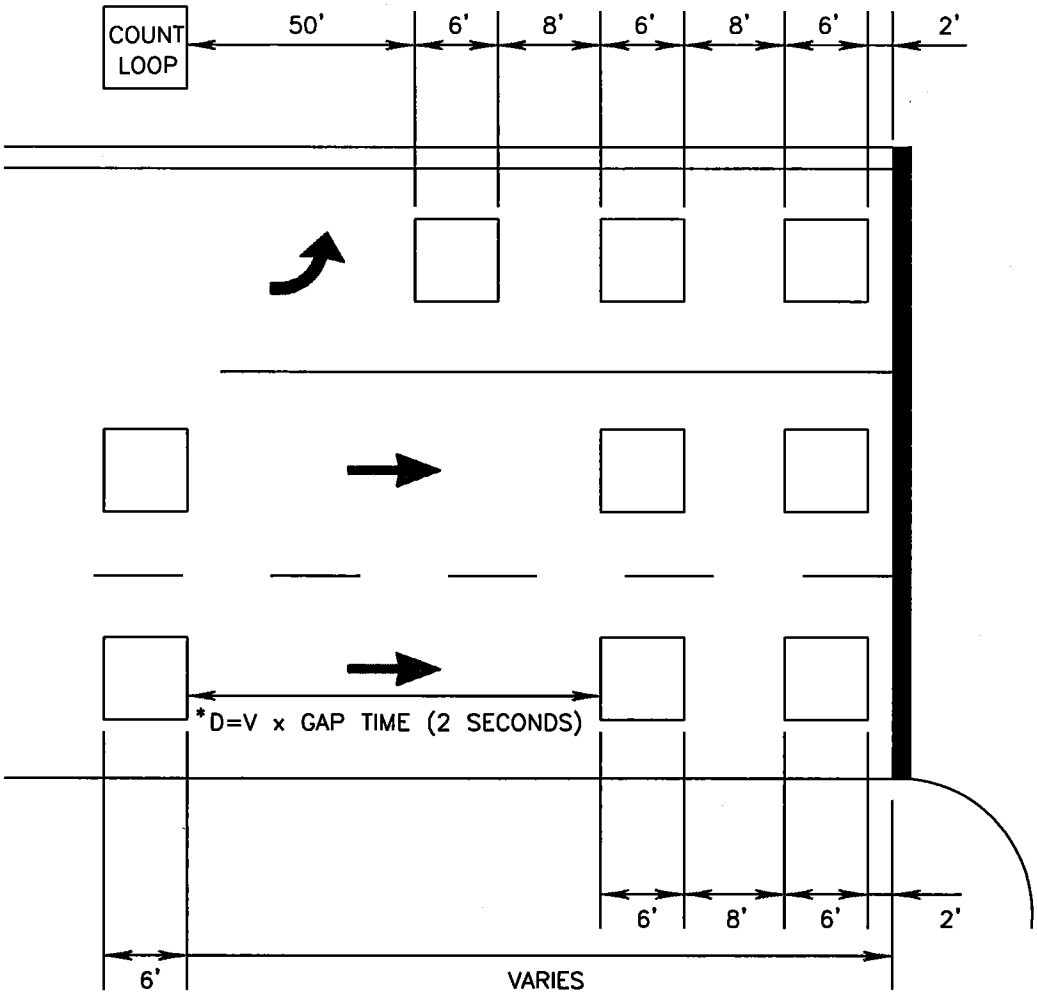

TYPICAL LOOP LAYOUT

* EXAMPLE
FOR A DESIGN SPEED OF 30 MPH
V=44 FT/SEC
D=44 FT/SEC X 2 SEC.
=88'

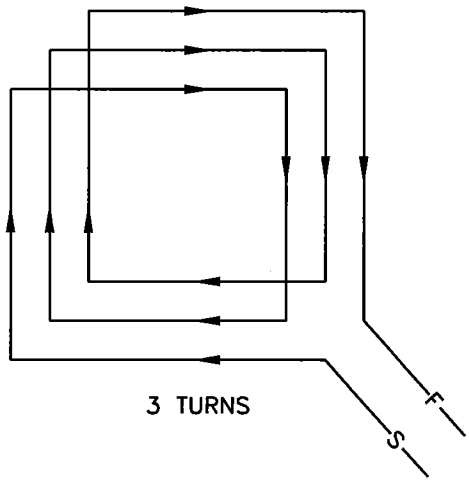

LOOP WINDING DETAIL

N.T.S.

City of Woodinville DEPARTMENT OF PUBLIC WORKS	TYPICAL LOOP LAYOUT	317 revision date NOV, 98

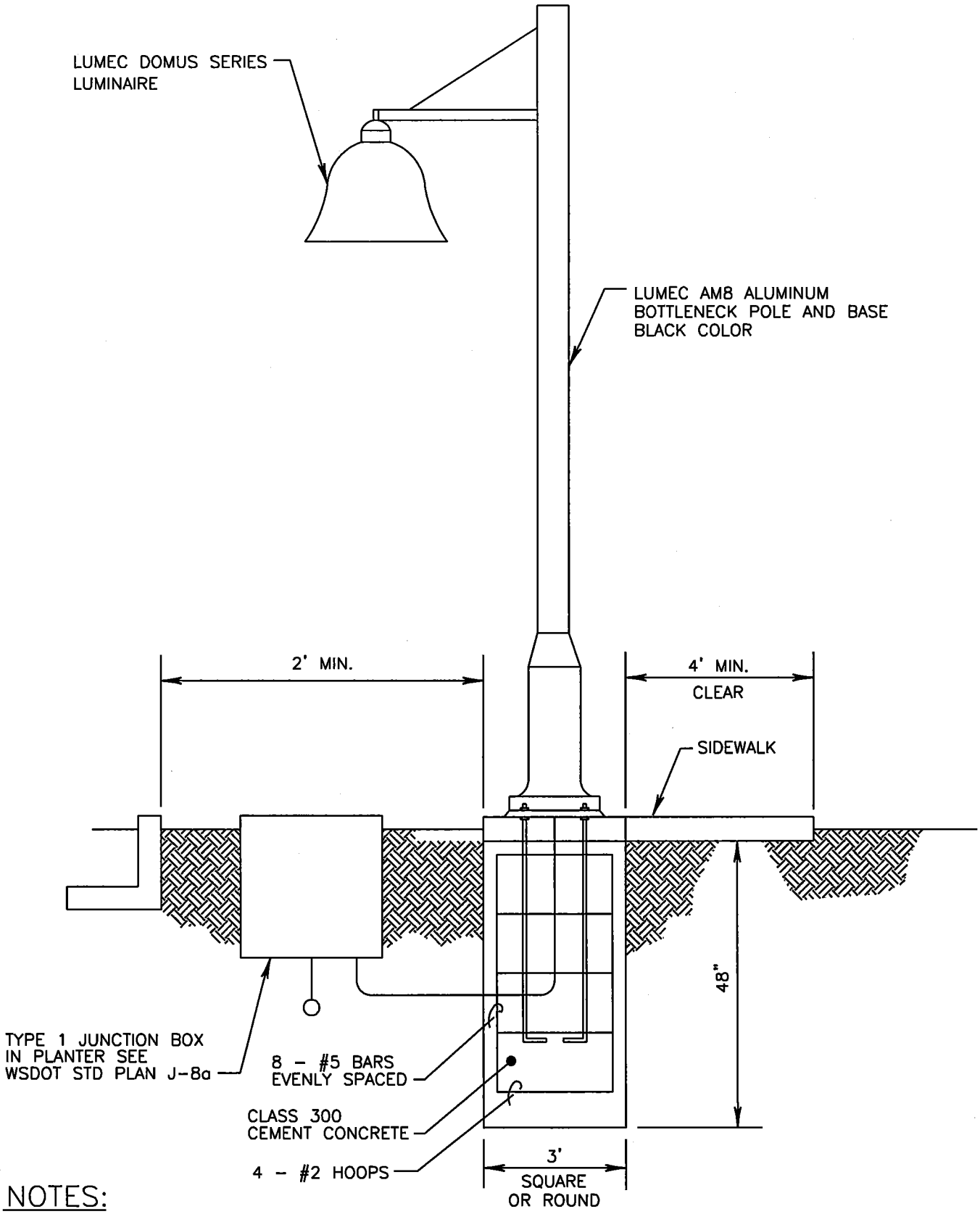

NOTES:

1 POLE FOUNDATION TO BE DESIGNED BY A PROFESSIONAL ENGINEER TO MEET SOIL CONDITIONS

N.T.S.

City of Woodinville DEPARTMENT OF PUBLIC WORKS	DOWNTOWN STREET LIGHT	318 revision date NOV, 98

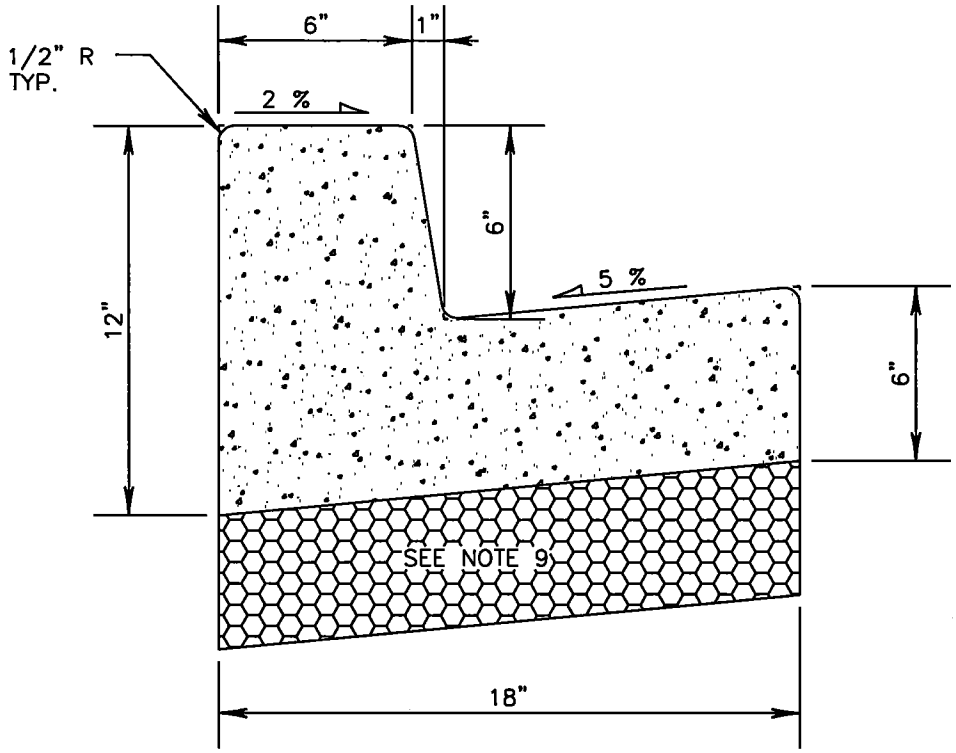

TYPICAL SECTION

NOTES:

1 FORMS SHALL BE TRUE TO LINE AND GRADE AND SECURELY STAKED.

2 FULL DEPTH EXPANSION JOINTS SHALL BE PLACED ON 15 FOOT CENTERS.

3 THRU JOINTS SHALL BE PLACED ADJACENT TO CATCH BASINS, INLETS AT POINTS OF TANGENCY ON STREETS, AND AT ALLEY AND DRIVEWAY RETURNS. MAXIMUM SPACING SHALL BE 20 FT. PRE-MOLDED JOINT FILLER SHALL 1/2" WIIDE AND CONFORM TO AASHTO DESIGN M213. DUMMY JOINTS SHALL BE PLACED EVERY 5 FT.

4 ALL JOINTS SHALL BE CLEAN AND EDGED.

5 CEMENT CONCRETE SHALL BE CLASS 3000 WITH 5% TO 6% AIR-ENTRAINMENT.

6 ONLY STEEL FORMS SHALL BE USED ON TANGENT SECTIONS. WOOD FORMS MAY BE USED ON CURVED SECTIONS.

7 FINISH SHALL BE LIGHT BROOM FINISH WITH SHINE JOINTS.

8 THE FINISHED CURB SHALL IMMEDIATELY BE SPRAYED WITH A TRANSPARENT CURING COMPOUND. CURB SHALL BE COVERED BY WATERPROOF PAPER OR PLASTIC MEMBRANE IN THE EVENT OF RAIN OR OTHER UNSUITABLE WEATHER. CURING TIME SHALL BE A MINIMUM OF 72 HOURS.

9 ALL CURB AND GUTTER SHALL BE PLACED ON A MIN OF 4" OF CRUSHED SURFACING TOP COURSE COMPACTED TO 95% OF MAXIMUM DRY DENSITY.

N.T.S.

City of Woodinville DEPARTMENT OF PUBLIC WORKS	CEMENT CONCRETE CURB & GUTTER, TYPE A-1	320A revision date NOV, 98

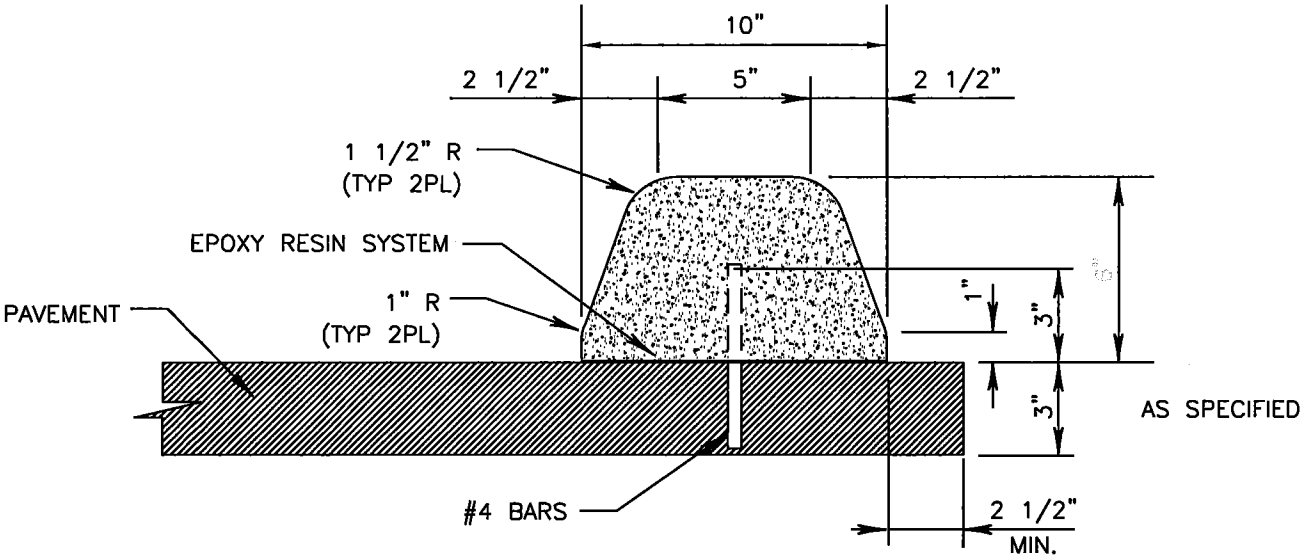

EXTRUDED CEMENT CONCRETE CURB

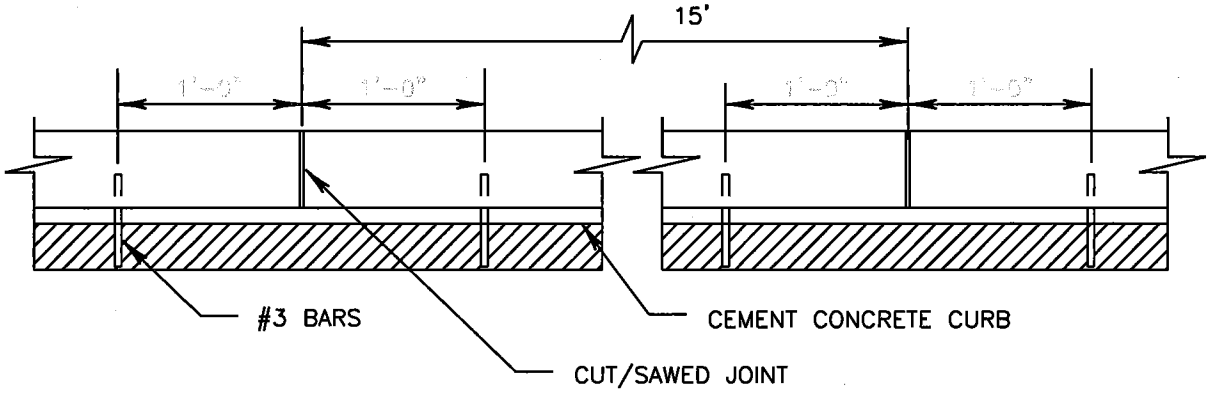

SPACING OF ANCHOR BARS

NOTES:

1 DUMMY JOINTS SHALL BE PLACED NOT TO EXCEED 15 FT ON CENTER. THRU JOINTS SHALL BE PLACED ONLY AT POINTS OF TANGENCY ON STREET ALLEY AND DRIVEWAY RETURNS AND WHERE THRU JOINTS OCCUR IN THE PAVEMENT SLAB.

2 CEMENT CONCRETE SHALL BE CLASS 3000 WITH 5% TO 6% AIR-ENTRAINMENT.

3 AT THE CONTRACTOR'S OPTION CONCRETE CURBS MAY BE ANCHORED TO THE EXISTING PAVEMENT EITHER BY PLACING STEEL TIE BARS 1 FOOT ON EACH SIDE OF EVERY JOINT, OR BY USING AN ADHESIVE. THE ADHESIVE SHALL MEET THE REQUIREMENTS OF SECTION 9-26 OF THE WSDOT/APWA STANDARD SPECIFICATIONS FOR EPOXY RESIN.

N.T.S.

City of Woodinville DEPARTMENT OF PUBLIC WORKS	EXTRUDED CEMENT CONCRETE CURB	320B revision date NOV, 98

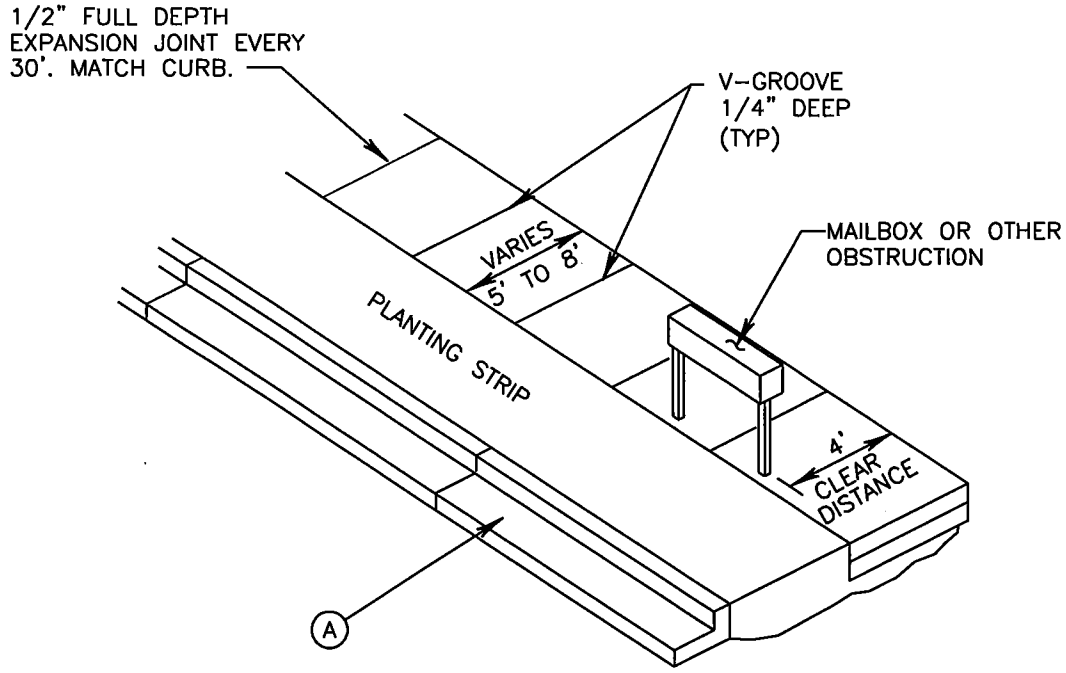

(A) CONCRETE CURB AND GUTTER
TYPE A-1, SEE STD DETAIL 320A

PLAN VIEWS

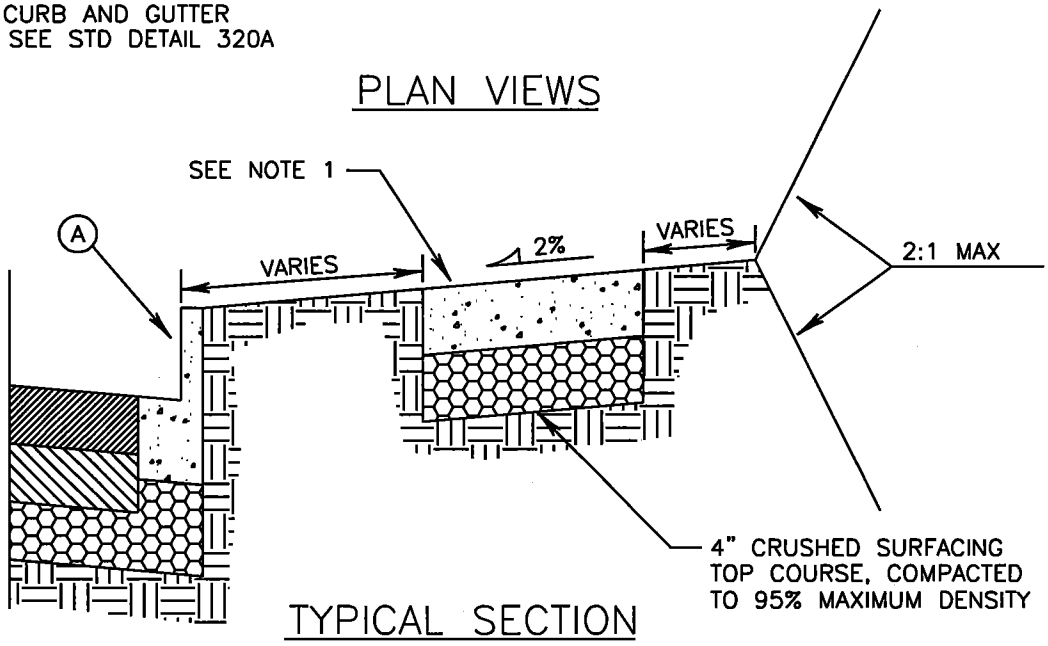

TYPICAL SECTION

NOTES:

1 SIDEWALKS SHALL BE A MINIMUM OF 4" THICK, AND SHALL BE CLASS 3000 CEMENT CONCRETE, WITH AIR ENTRAINMENT (MIN 4%, MAX 8%).

2 FULL EXPANSION JOINTS SHALL GENERALLY BE PLACED TO MATCH THOSE PLACED IN ADJACENT CURB & GUTTER, WITH MAXIMUM SPACING OF 20 FEET, FINAL SPACING DETERMINATION SHALL BE DECIDED BY THE INSPECTOR IN THE FIELD.

3 SUBGRADE SHALL BE COMPACTED TO NOT LESS THAN 95% OF MAXIMUM DENSITY.

4 SIDEWALK SHALL BE AT LEAST 6" THICK IN RESIDENTIAL DRIVEWAYS AND BEHIND ROLL-CURB AND 8" FOR COMMERCIAL DRIVEWAYS.

5 THE FINISHED SIDEWALK SHALL BE SPRAYED WITH A TRANSPARENT CURING COMPOUND COVERED BY WATERPROOF PAPER OR PLASTIC SHEETING IN THE EVENT OF RAIN OR OTHER INCLEMENT WEATHER. CURING TIME SHALL BE FOR A MINIMUM OF 72 HOURS.

6 ALL JOINTS SHALL BE CLEANED AND EDGED WITH AN EDGER HAVING A 1/4" RADIUS.

7 SIDEWALK AND PLANTER STRIP WIDTHS SHALL CONFORM TO DIMENSIONS SHOWN IN APPROPRIATE STREET CROSS SECTION DETAIL OR AS PPROVED BY THE PUBLICS WORKS DIRECTOR.

N.T.S.

City of Woodinville DEPARTMENT OF PUBLIC WORKS	CEMENT CONCRETE SIDEWALK DETAILS	321 revision date NOV, 98

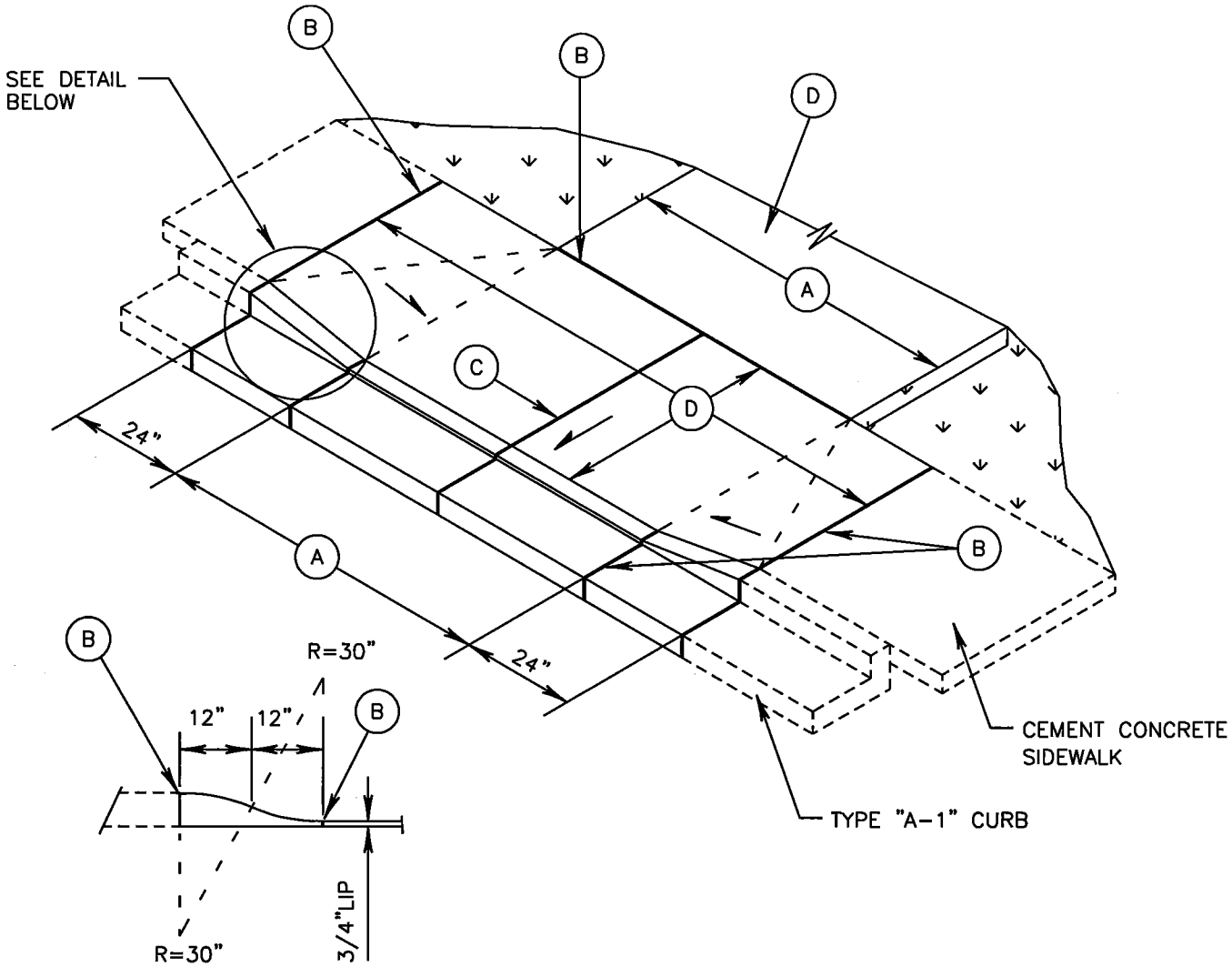

CURB TRANSITION DETAIL

(A) EQUALS WIDTH OF DRIVEWAY AT PROPERTY LINE. MINIMUM WIDTH = 14'.

(B) 1/2" WIDE FULL DEPTH EXPANSION JOINT.

(C) FULL DEPTH EXPANSION JOINT IF (A) IS 15' OR GREATER.

(D) DRIVEWAY TO BE SURFACED WITH ASPHALT OR CONCRETE.

(E) DRIVEWAY CEMENT CONCRETE SHALL BE A MIN OF 6" THICK FOR RESIDENTIAL AND 8" THICK FOR COMMERCIAL AND IS TO BE PLACED ON A MINIMUM OF 4" CRUSHED SURFACING TOP COURSE COMPACTED TO 95% MAXIMUM DENSITY, OVER A COMPACTED SUBGRADE.

N.T.S.

City of Woodinville DEPARTMENT OF PUBLIC WORKS	CEMENT CONCRETE DRIVEWAY TYPE 1	322 revision date NOV, 98

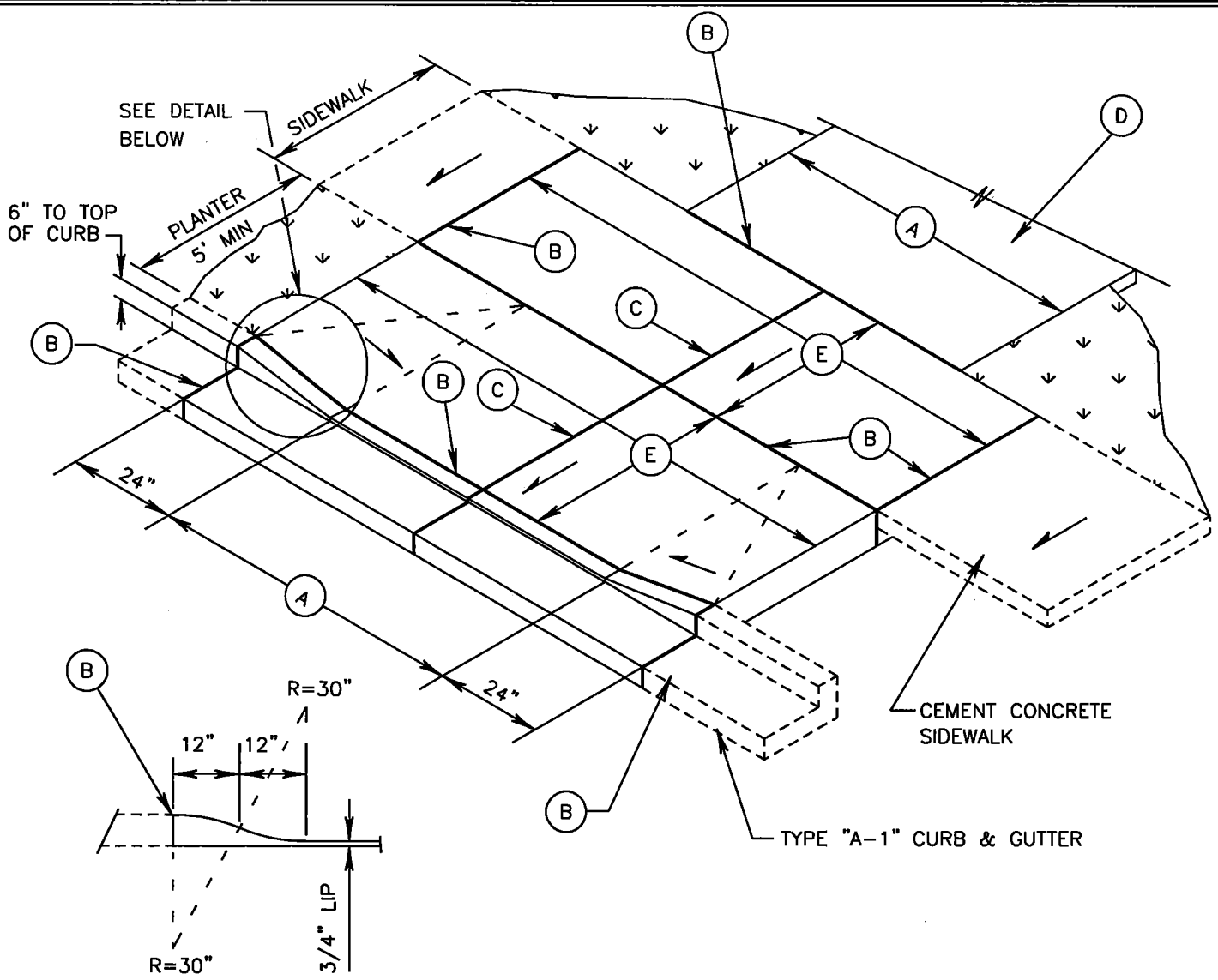

CURB TRANSITION DETAIL

(A) EQUALS WIDTH OF DRIVEWAY AT PROPERTY LINE. (10' MIN.–20' MAX. RESIDENTIAL AND 20' MIN.–VAR. MAX. COMMERCIAL)

(B) 1/2" WIDE FULL DEPTH EXPANSION JOINT.

(C) FULL DEPTH EXPANSION JOINT IF (A) IS 15' OR GREATER.

(D) DRIVEWAY TO BE SURFACED WITH ASPHALT OR CONCRETE.

(E) DRIVEWAY CEMENT CONCRETE SHALL BE A MIN OF 6" THICK FOR RESIDENTIAL AND 8" THICK FOR COMMERCIAL AND IS TO BE PLACED ON A MINIMUM OF 4" CRUSHED SURFACING TOP COURSE COMPACTED TO 95% MAXIMUM DENSITY, OVER COMPACTED SUBGRADE.

N.T.S.

City of Woodinville DEPARTMENT OF PUBLIC WORKS	CEMENT CONCRETE DRIVEWAY TYPE 2	323 revision date NOV, 98

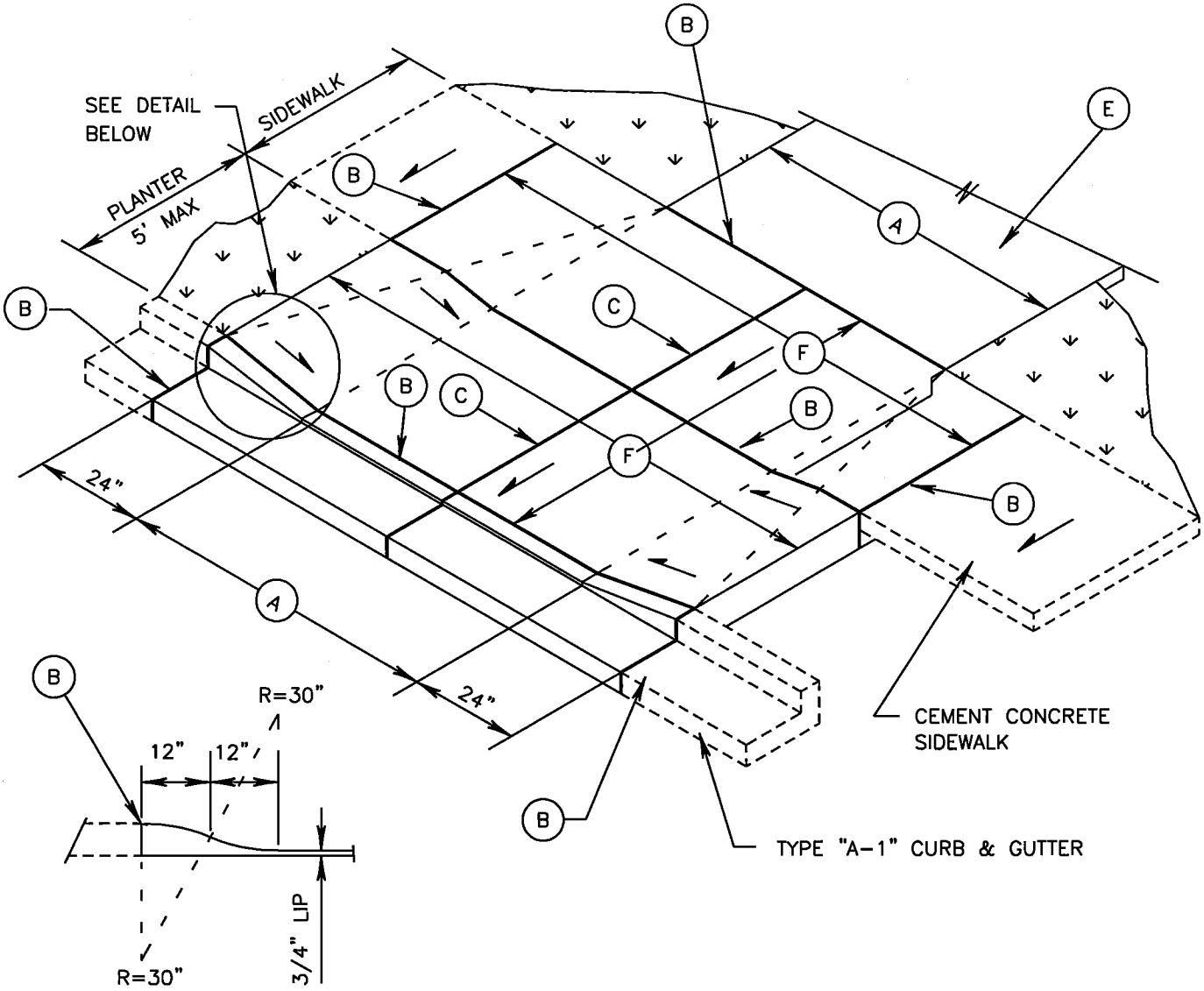

CURB TRANSITION DETAIL

(A) EQUALS WIDTH OF DRIVEWAY AT PROPERTY LINE.

(B) 1/2" WIDE FULL DEPTH EXPANSION JOINT.

(C) FULL DEPTH EXPANSION JOINT IF (B) IS 15' OR GREATER.

(D) DRIVEWAY TO BE SURFACED WITH ASPHALT OR CONCRETE.

(E) DRIVEWAY CEMENT CONCRETE SHALL BE A MIN OF 6" THICK FOR RESIDENTIAL AND 8" THICK FOR COMMERCIAL AND IS TO BE PLACED ON A MINIMUM OF 4" CRUSHED SURFACING TOP COURSE COMPACTED TO 95% MAXIMUM DENSITY, OVER COMPACTED SUBGRADE.

N.T.S.

City of Woodinville DEPARTMENT OF PUBLIC WORKS	CEMENT CONCRETE DRIVEWAY TYPE-3	324 revision date NOV, 98

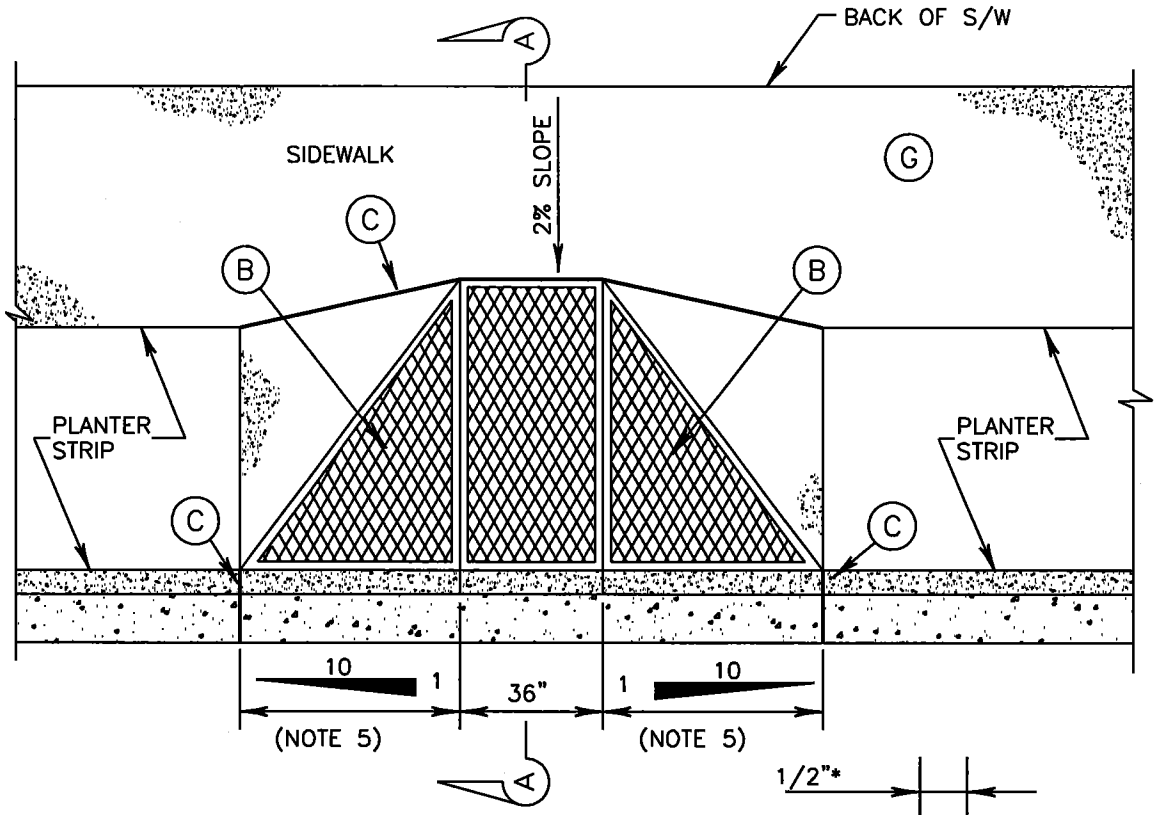

PLAN

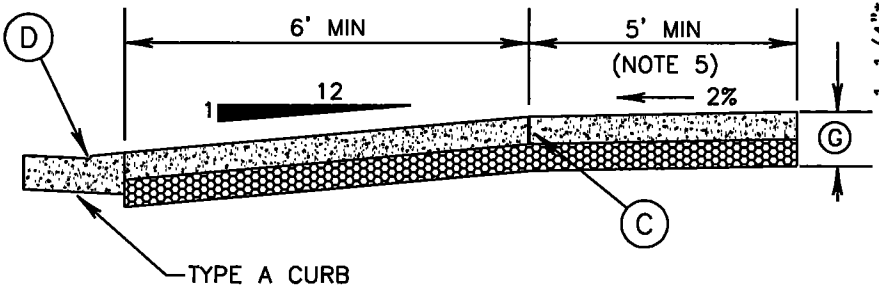

SECTION A–A

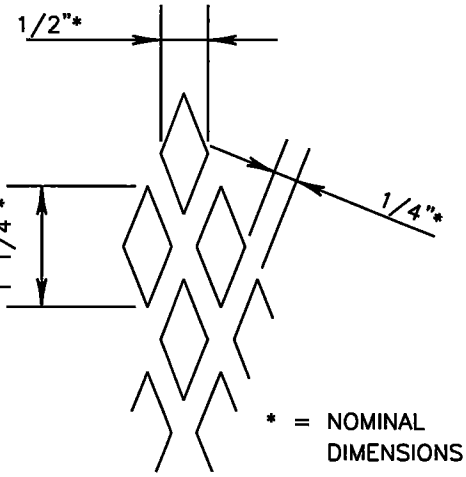

RAMP TEXTURE DETAIL

(A) ALL CURB RAMPS SHALL COMPLY WITH THE AMERICAN DISABILTIES ACT.

(B) RAMP TEXTURE IS TO BE DONE WITH AN EXPANDED METAL GRATE PLACED AND REMOVED FROM WET CONCRETE TO LEAVE A DIAMOND PATTERN. THE LONG AXIS OF THE DIAMOND SHALL BE PERPENDICULAR TO CURB. GROOVES SHALL BE 1/8" DEEP AND 1/4" WIDE.

(C) 3/8" EXPANSION JOINT.

(D) 3/4" MAXIMUM LIP AT GUTTER LINE.

(E) IF LANDING AREA IS LESS THAN 5', DECREASE SIDE RAMP SLOPE TO 12:1 (HORIZONTAL:VERTICAL).

(F) CURB RAMPS SHALL NOT BE POURED INTEGRAL WITH SIDEWALK AND SHALL BE ISOLATED BY EXPANSION JOINT MATERIAL ON ALL SIDES, BUT NOT AT END OF RAMP ADJACENT TO ROADWAY. CURB & GUTTER ARE TO BE INTEGRAL WITH RAMP.

(G) CEMENT CONCRETE SIDEWALK, SEE STD. DETAIL 321.

N.T.S.

City of Woodinville DEPARTMENT OF PUBLIC WORKS	TYPE A CURB RAMP	326A revision date NOV, 98

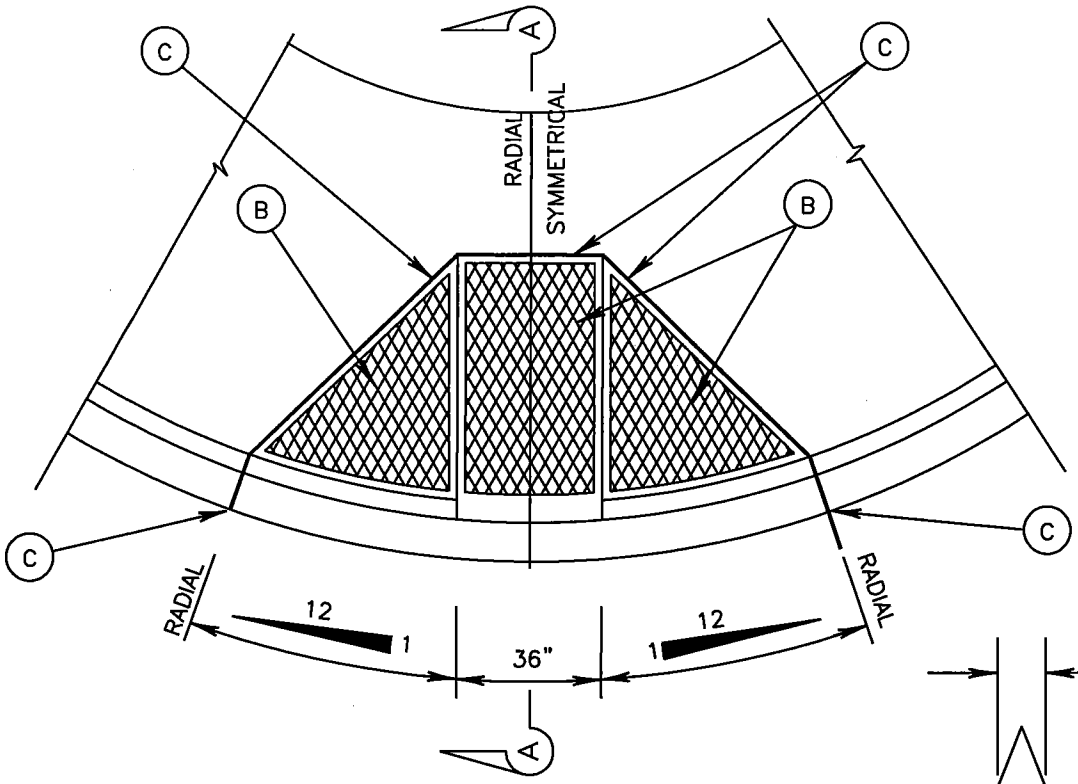

PLAN

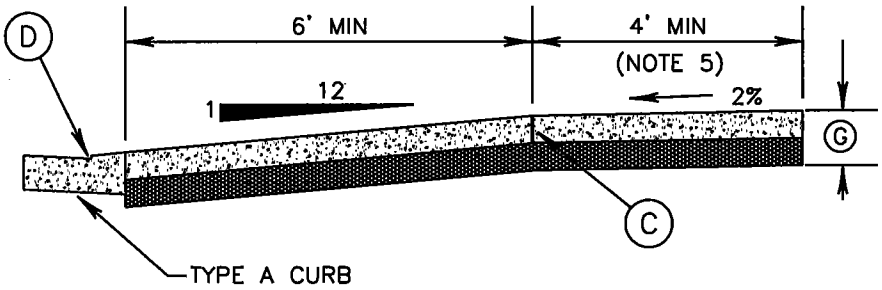

SECTION A–A

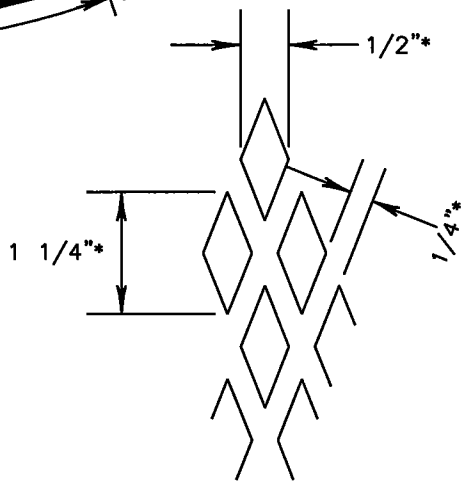

* = NOMINAL DIMENSIONS

RAMP TEXTURE DETAIL

(A) ALL CURB RAMPS SHALL COMPLY WITH THE AMERICAN DISABILTIES ACT.

(B) RAMP TEXTURE IS TO BE DONE WITH AN EXPANDED METAL GRATE PLACED AND REMOVED FROM WET CONCRETE TO LEAVE A DIAMOND PATTERN. THE LONG AXIS OF THE DIAMOND SHALL BE PERPENDICULAR TO CURB. GROOVES SHALL BE 1/8" DEEP AND 1/4" WIDE.

(C) 3/8" EXPANSION JOINT.

(D) 3/4" MAXIMUM LIP AT GUTTER LINE.

(E) IF LANDING AREA IS LESS THAN 5', DECREASE SIDE RAMP SLOPE TO 12:1 (HORIZONTAL:VERTICAL).

(F) CURB RAMPS SHALL NOT BE POURED INTEGRAL WITH SIDEWALK AND SHALL BE ISOLATED BY EXPANSION JOINT MATERIAL ON ALL SIDES, BUT NOT AT END OF RAMP ADJACENT TO ROADWAY.

(G) CEMENT CONCRETE SIDEWALK, SEE STD. DETAIL 321.

N.T.S.

City of Woodinville DEPARTMENT OF PUBLIC WORKS	CURB RAMP OPTION 1	326B revision date NOV, 98

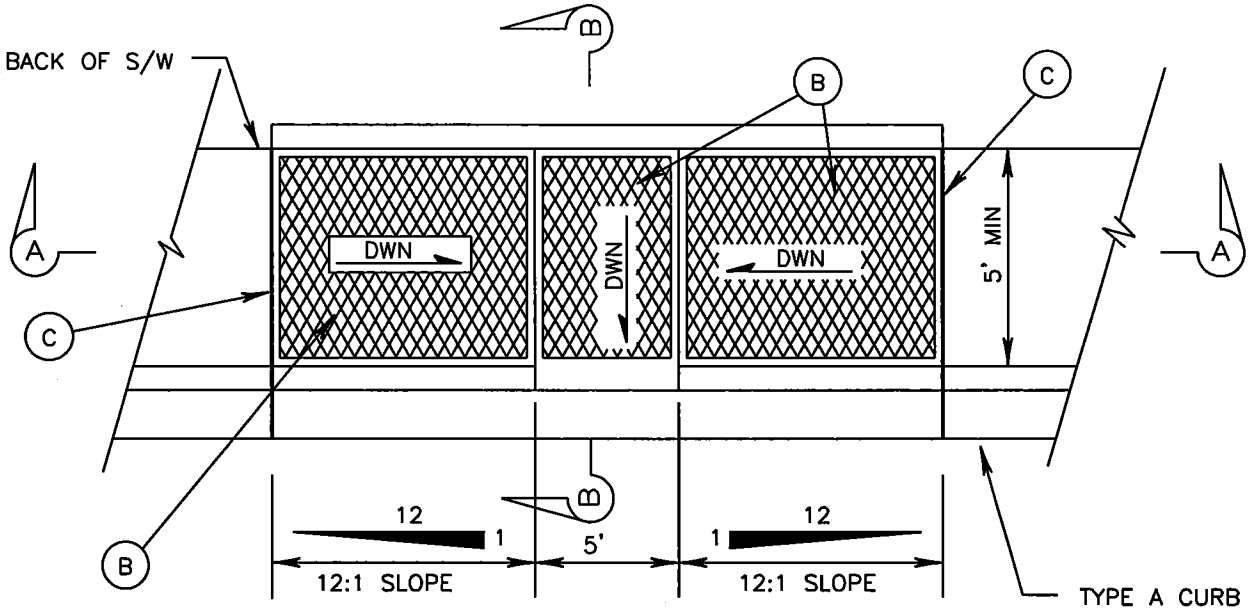

PLAN

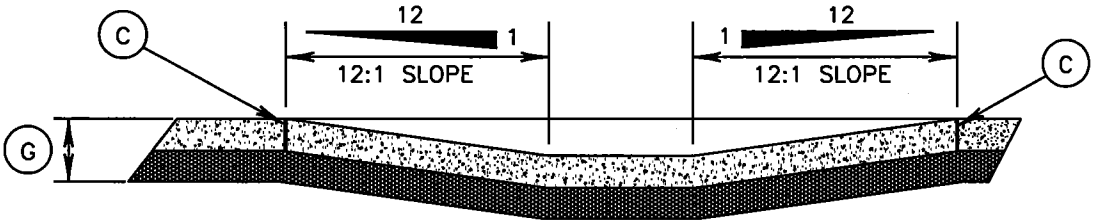

SECTION A–A

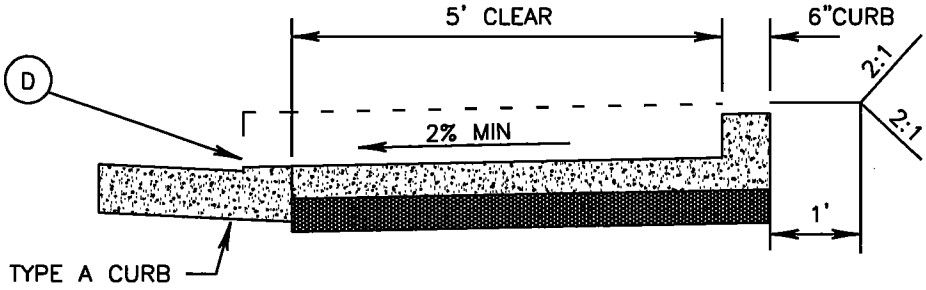

SECTION B–B

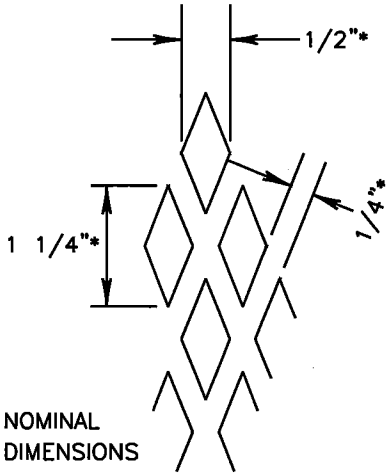

RAMP TEXTURE DETAIL

(A) ALL CURB RAMPS SHALL COMPLY WITH THE AMERICAN DISABILTIES ACT.

(B) RAMP TEXTURE IS TO BE DONE WITH AN EXPANDED METAL GRATE PLACED AND REMOVED FROM WET CONCRETE TO LEAVE A DIAMOND PATTERN. THE LONG AXIS OF THE DIAMOND SHALL BE PERPENDICULAR TO CURB. GROOVES SHALL BE 1/8" DEEP AND 1/4" WIDE.

(C) 3/8" EXPANSION JOINT.

(D) 1/2" MAXIMUM LIP AT GUTTER LINE.

(E) IF LANDING AREA IS LESS THAN 5', DECREASE SIDE RAMP SLOPE TO 12:1 (HORIZONTAL:VERTICAL).

(F) CURB RAMPS WILL NOT BE POURED INTEGRAL WITH SIDEWALK AND SHALL BE ISOLATED BY EXPANSION JOINT MATERIAL ON ALL SIDES, BUT NOT AT END OF RAMP ADJACENT TO ROADWAY.

(G) CEMENT CONCRETE SIDEWALK, SEE STD. DETAIL 321.

N.T.S.

City of Woodinville DEPARTMENT OF PUBLIC WORKS	CURB RAMP OPTION 2	326C revision date NOV, 98

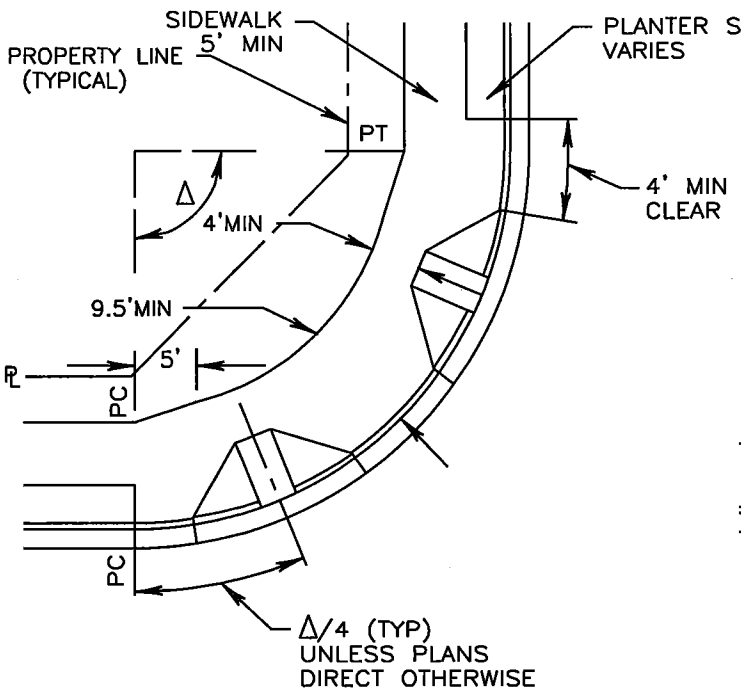

ALTERNATE "A"

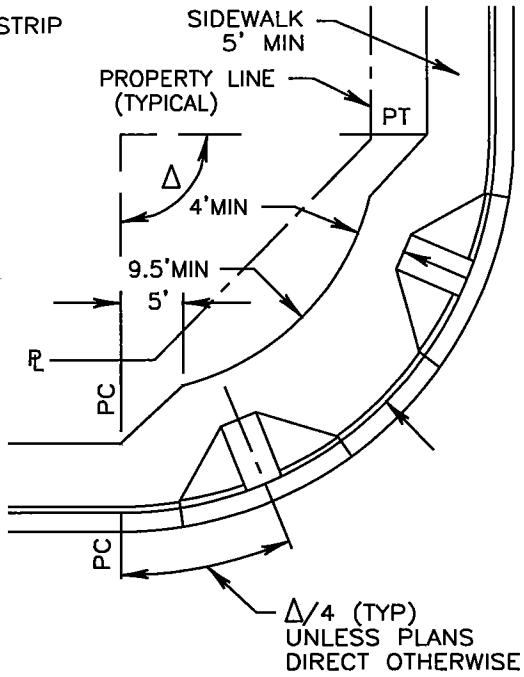

ALTERNATE "B"

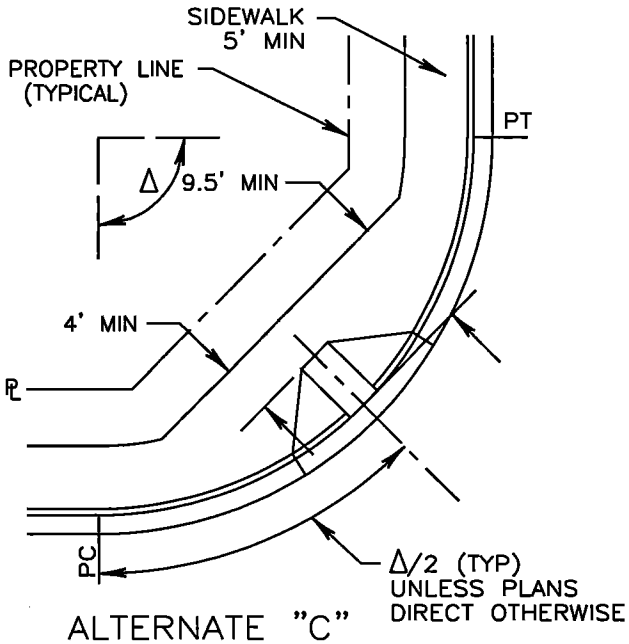

ALTERNATE "C"

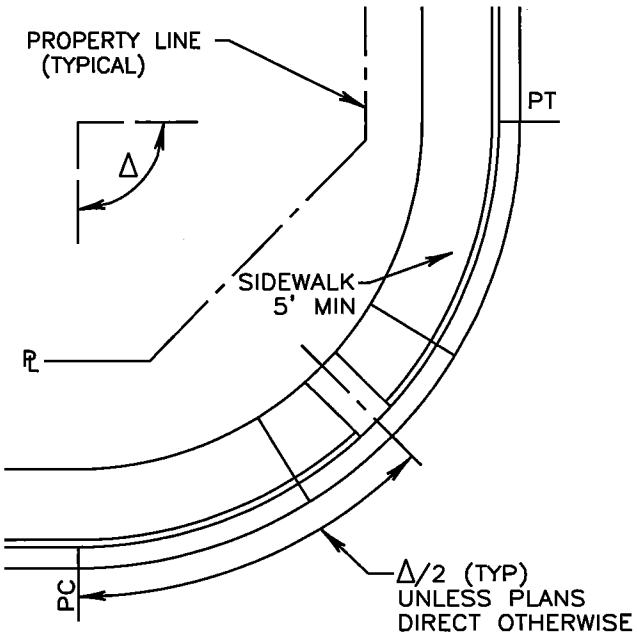

ALTERNATE "D"

NOTES:

1 ALL CURB RAMPS SHALL COMPLY WITH THE AMERICAN DISABILITIES ACT.

2 ALTERNATES "C" & "D" FOR USE ONLY AT RESIDENTIAL – LOW DENSITY INTERSECTIONS.

3 ALTERNATE "C" REQUIRES 5' SIDEWALKS AND 12:1 SLOPES ON WING WALLS. ALTERNATE "D" WILL REQUIRE JUSTIFICATION AND APPROVAL OF PUBLIC WORKS DIRECTOR.

N.T.S.

City of Woodinville DEPARTMENT OF PUBLIC WORKS	CURB RAMP TYPICAL LOCATIONS	327 revision date NOV, 98

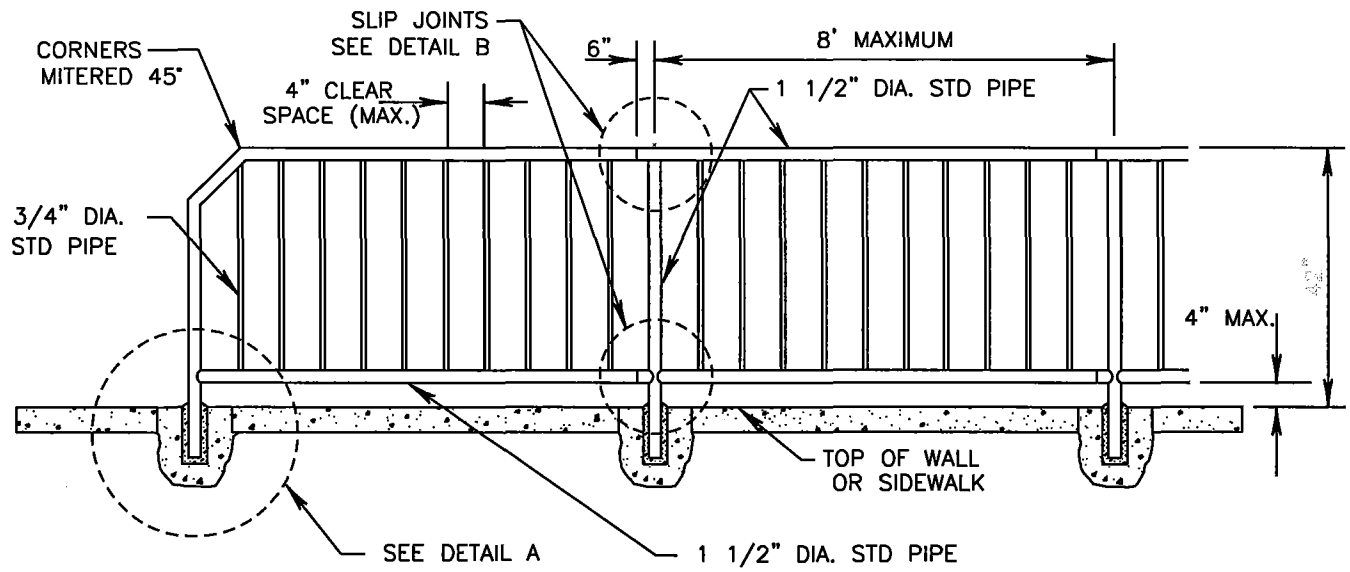

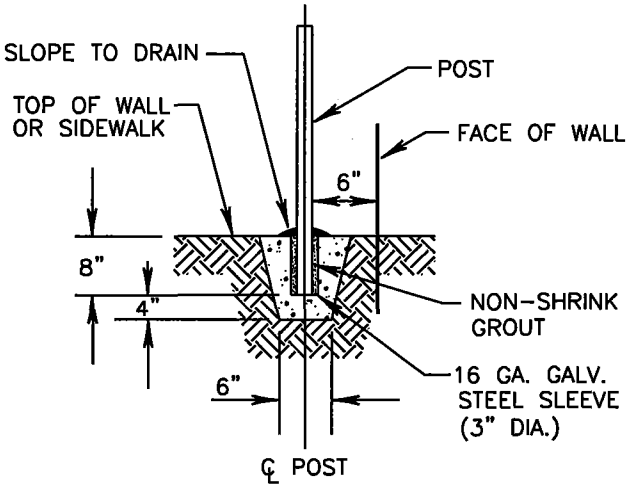

DETAIL A

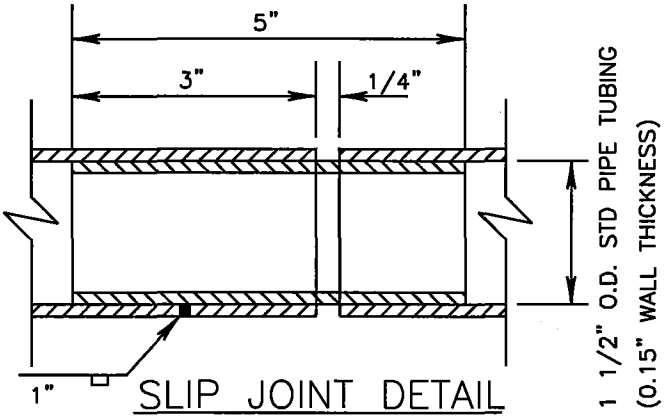

DETAIL B

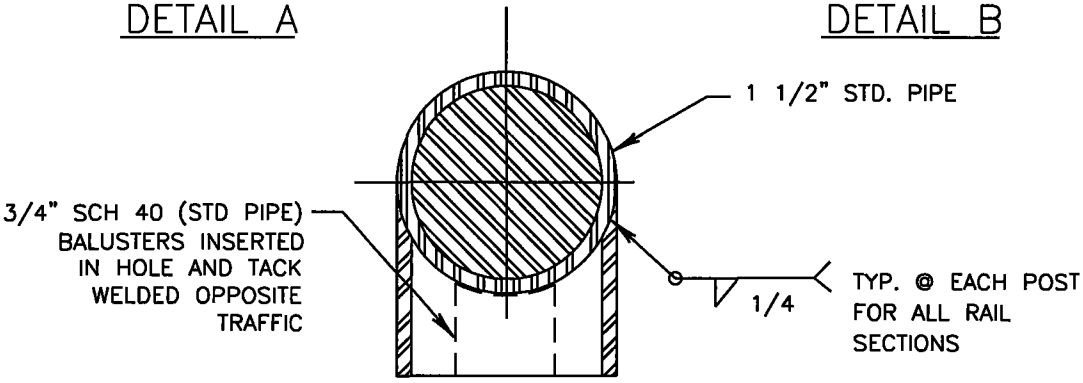

NOTES:

1 MATERIAL FOR PEDESTRIAN HANDRAIL SHALL BE ALUMINUM (ASTM B 429). OR HOT DIPPED GALVINIZED STEEL (ASTM A 53) AS APPROVED BY THE PUBLIC WORKS DIRECTOR.

2 SEE STANDARD DRAWING No. 329A FOR ADDITIONAL FABRICATION AND SPECIFICATION REQUIREMENTS.

3 PROVIDE SLIP JOINTS AT STAIRWAY EXPANSION JOINTS AND AT 24 FT ON CENTER MAXIMUM.

N.T.S.

City of Woodinville DEPARTMENT OF PUBLIC WORKS	PEDESTRIAN HANDRAIL (SHEET 1 OF 2)	329 revision date NOV, 98

PEDESTRIAN RAIL (ALUMINUM)

1 ALUMINUM PEDESTRIAN RAIL SHALL BE FABRICATED AND INSTALLED IN ACCORDANCE WITH THESE SPECIAL PROVISIONS AND STANDARD DRAWING NO. 329.

2 ALUMINUM PEDESTRIAN RAIL SHALL BE NATURAL ALUMINUM COLOR.

3 COMPLETED ALUMINUM RAILING UNITS SHALL BE ANODIZED AFTER FABRICATION CONFORMING TO THE REQUIREMENTS OF THE ALUMINUM ASSOCIATION STANDARD FOR ANODIZED ARCHITECTURAL ALUMINUM, CLASS I ANODIC COATING, AA-C22-A41.

4 WELDING SHALL CONFORM TO THE REQUIREMENTS OF THE SPECIFICATIONS FOR ALUMINUM STRUCTURES OF THE ALUMINUM ASSOCIATION. ALL EXPOSED WELDS SHALL BE GROUND FLUSH WITH ADJACENT SURFACES.

5 THE BASE METAL FOR ALUMINUM RAILING SHALL BE ASA ALLOY DESIGNATION 6063-T6. PIPE AND TUBING SHALL BE EXTRUDED CONFORMING TO THE REQUIREMENTS OF ASTM B 429, PLATES AND SHEETS SHALL BE ROLLED CONFORMING TO ASTM B 209, AND RODS, BARS, OR SHAPES SHALL BE EXTRUDED CONFORMING TO ASTM B 221.

6 HORIZONTAL RAILS AND VERTICAL SUPPORT POSTS SHALL BE 1-1/2 INCH DIAMETER STANDARD PIPE AND BALUSTERS BE 3/4 INCH DIAMETER STANDARD ALUMINUM PIPE. RAILS, POSTS, AND BALUSTERS SHALL BE MACHINE CUT TO PROVIDE A UNIFORM LENGTH PRIOR TO ASSEMBLY.

7 RAILING SHALL BE ERECTED AND ADJUSTED, IF NECESSARY, TO ENSURE A CONTINUOUS LINE AND GRADE.

PEDESTRIAN RAIL (GALVANIZED STEEL)

1 GALVANIZED PEDESTRIAN RAIL SHALL BE FABRICATED AND INSTALLED IN ACCORDANCE WITH THESE SPECIAL PROVISIONS AND STANDARD DRAWING NO. 329.

2 STEEL RAILINGS MATERIALS SHALL BE WELDED OR SEAMLESS STEEL PIPE CONFORMING TO THE REQUIREMENTS OF ASTM A 53, STRUCTURAL STEEL CONFORMING TO ASTM A 36, OR TUBULAR SECTIONS OF HOT ROLLED MILD STEEL, CONFORMING TO ASTM A 501. ALL WELDING SHALL CONFORM TO AMERICAN WELDING SOCIETY STRUCTURAL WELDING CODE AWS D1.1. AFTER FABRICATION EACH SECTION OF RAILING SHALL BE HOT-DIPPED GALVANIZED WITH A MINIMUM ZINC COATING OF 2 OUNCES PER SQUARE FOOT. ALL BURRS AND SHARP EDGES SHALL BE REMOVED PRIOR TO GALVANIZING.

3 FIELD WELDS SHALL BE GALVANIZED WITH 3 COATS OF SUCH MATERIALS AS GALVALLOY OR GALVICON. PAINTING OF WELDS WILL NOT BE PERMITTED.

4 HORIZONTAL RAILS AND VERTICAL SUPPORT POSTS SHALL BE 1-1/2 INCH DIAMETER AND BALUSTERS SHALL BE 3/4 INCH DIAMETER STANDARD WEIGHT GALVANIZED STEEL PIPE. RAILS, POSTS, AND BALUSTERS SHALL BE MACHINE CUT TO PROVIDE A UNIFORM LENGTH PRIOR TO ASSEMBLY.

5 RAILING SHALL BE ERECTED AND ADJUSTED, IF NECESSARY, TO ENSURE A CONTINUOUS LINE AND GRADE.

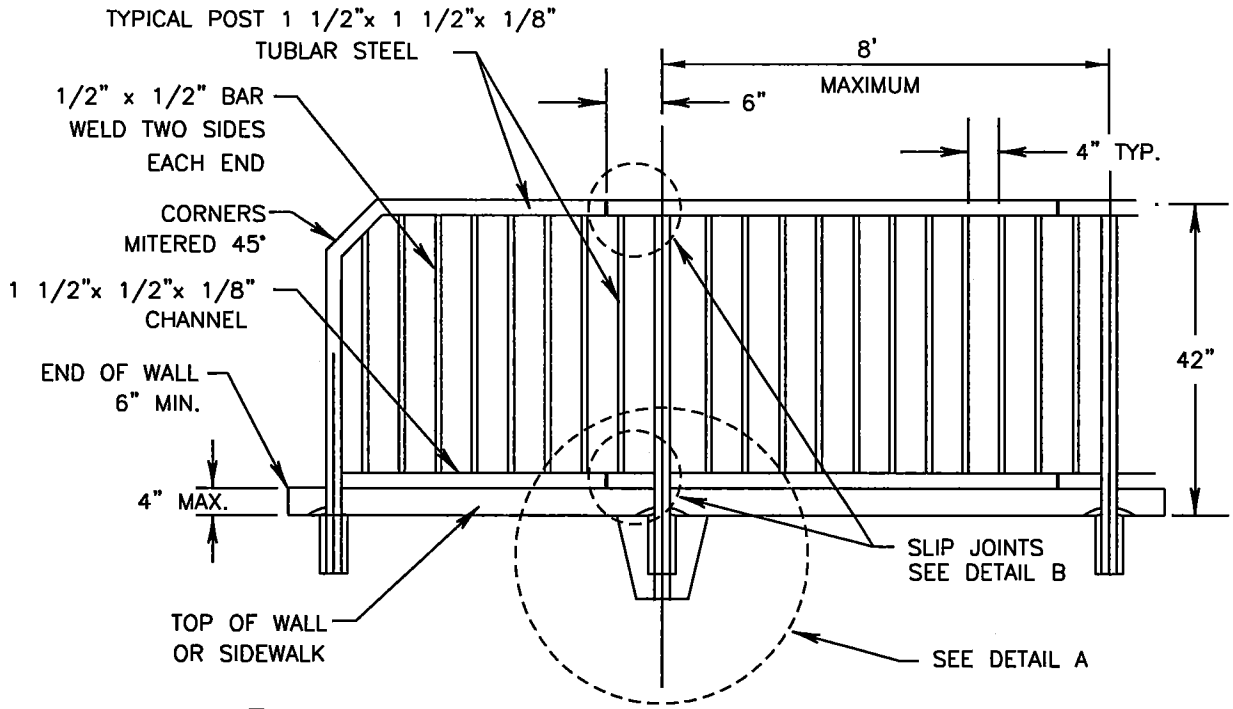

FRONT VIEW

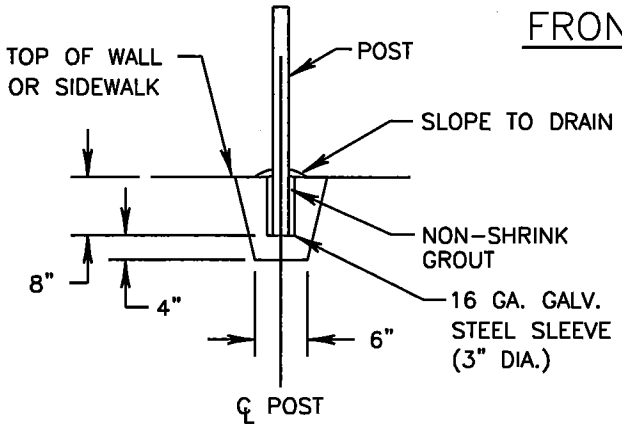

DETAIL A

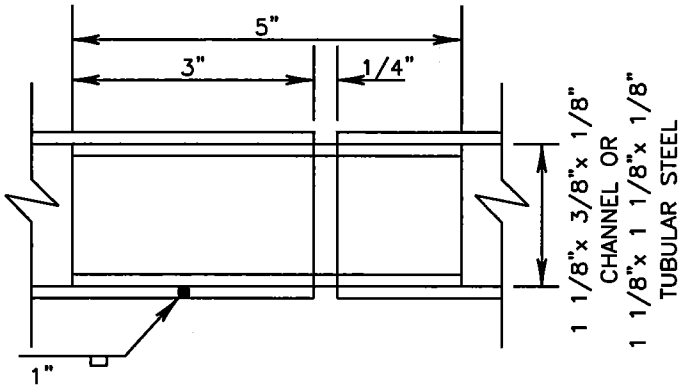

SLIP JOINT DETAIL

DETAIL B

NOTES:

1 ORNAMENTAL RAILING SHALL BE CONSTRUCTED OF STEEL CONFORMING TO ASTM A-120.

2 WELDING SHALL CONFORM TO THE REQUIREMENTS OF THE "STRUCTURAL WELDING CODE" AWS D 1.1.

3 PROVIDE SLIP JOINTS AT STAIRWAY EXPANSION JOINTS AND AT EVERY 24 FEET ON CENTER MAXIMUM.

4 MAXIMUM SPACING OF POSTS SHALL BE 8 FEET ON STRAIGHT ALIGNMENT AND 6 FEET ON CURVED ALIGNMENT LESS THAN 30 FEET RADIUS.

5 AFTER FABRICATION, ALL BURRS AND SHARP EDGES SHALL BE REMOVED.

6 APPLY RUST PROOF METAL PRIME AND ONE COAT OF BLACK ORNAMENTAL IRON METAL PAINT.

N.T.S.

City of Woodinville DEPARTMENT OF PUBLIC WORKS	ORNAMENTAL HANDRAIL	330 revision date NOV, 98

NOTES:

1. ALL TUBING MATERIAL SHALL BE "UNISTRUT TELESPAR" TYPE GALVANIZED STEEL (ASTM A70 GRADE 33) OR APPROVED EQUIVALENT.
2. SIDEWALKS AND PAVED AREAS SHALL BE CORE DRILLED BEFORE ATTEMPTING SIGN INSTALLATION
3. SIGN POSTS NOT LOCATED IN THE SIDEWALK OR PAVED AREAS SHALL BE BURIED DIRECTLY IN THE EXISTING GROUND AT A MIN. DEPTH OF 36" WITH 0.5 CY OF CONCRETE SUB-BASE
4. IF SIGNS ARE INSTALLED WHERE THE DISTANCE FROM THE OUTSIDE DIA. OF THE SONO TUBE TO THE BACK OF THE WALK IS LESS THAN 6', THE SIDEWALK SHALL BE REINFORCED AS DIRECTED BY THE ENGINEER.
5. SIGNS SHALL HAVE A MIN. HEIGHT OF 7' FROM THE NEAR EDGE OF SIGN TO THE SIDEWALK GRADE, AND A 2' LATERAL CLEARANCE FROM THE FACE OF CURB TO THE NEAR EDGE OF SIGN. SIGN LOCATION SHALL BE AS SHOWN ON THE PLANS AND PER M.U.T.C.D.

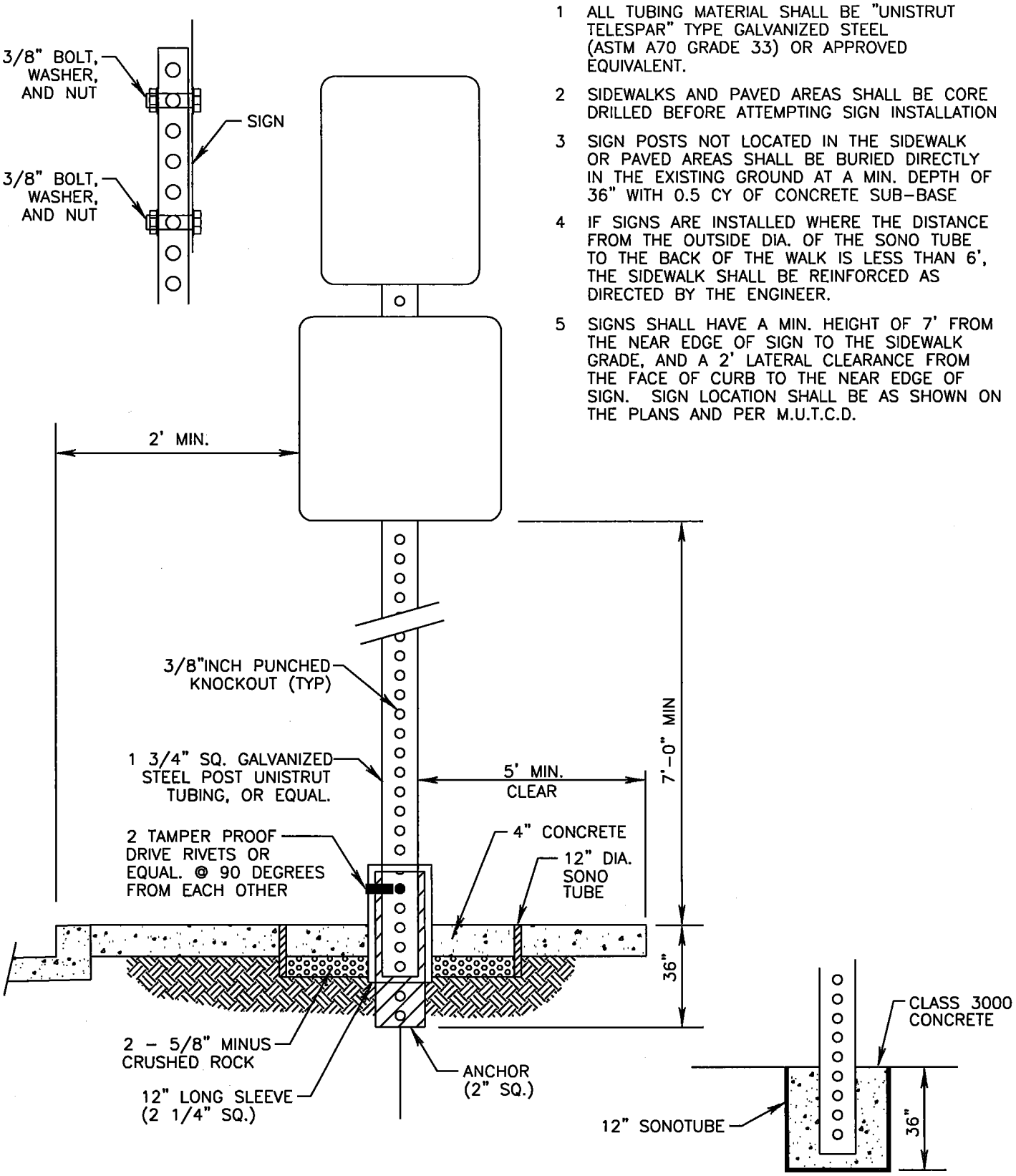

N.T.S.

City of Woodinville DEPARTMENT OF PUBLIC WORKS	SIGN MOUNTING DETAIL	331 revision date NOV, 98

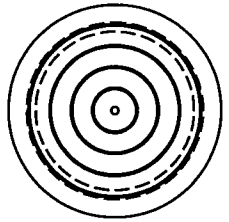

PLAN

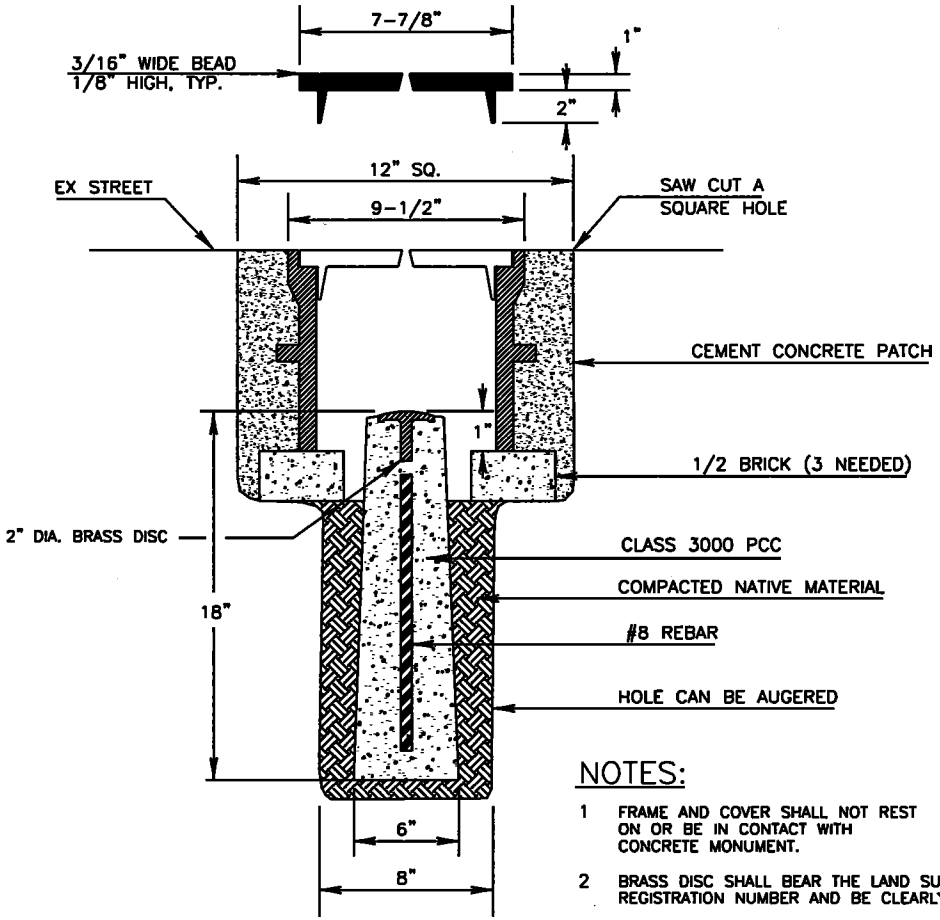

NOTES:

1. FRAME AND COVER SHALL NOT REST ON OR BE IN CONTACT WITH CONCRETE MONUMENT.
2. BRASS DISC SHALL BEAR THE LAND SURVEYORS REGISTRATION NUMBER AND BE CLEARLY PUNCHED
3. FRAME AND COVER SHALL BE SATHER MANUFACTURING COMPANY No. 2022 W/CONCRETE MONUMENT OR EQUAL.

N.T.S.

CITY OF BOTHELL STANDARD FRAME AND COVER PER STANDARD DRAWING #335.

CEMENT CONCRETE PATCH

CITY.
MARKED, NUMBERED AND DATED BY SURVEYOR.
(NUMBER ASSIGNED BY THE CITY.)

REMOVE EXCESS CONCRETE BETWEEN PVC SLEEVE AND MONUMENT CASE.

UNDISTURBED EARTH

6"ø MIN. HOLE TO BE AUGERED.

City of Woodinville DEPARTMENT OF PUBLIC WORKS	SURVEY CONTROL MONUMENT	336 revision date NOV, 98

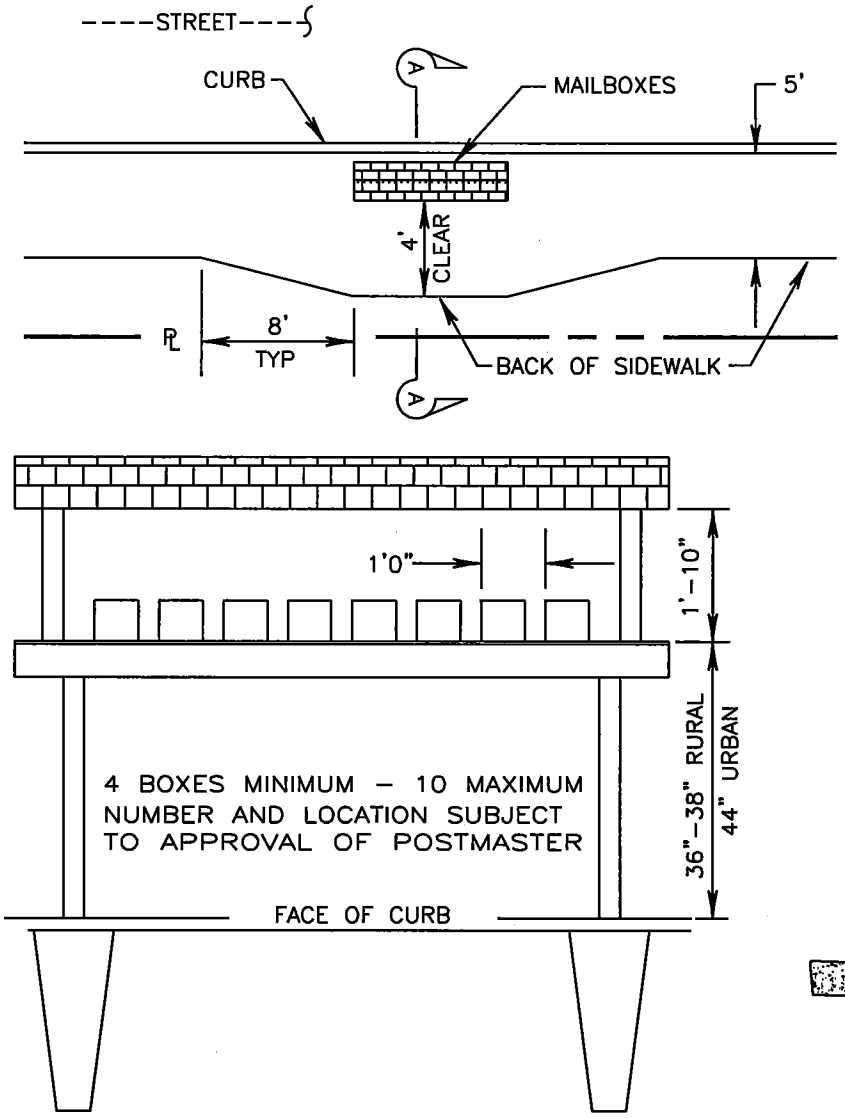

ELEVATION FROM STREET

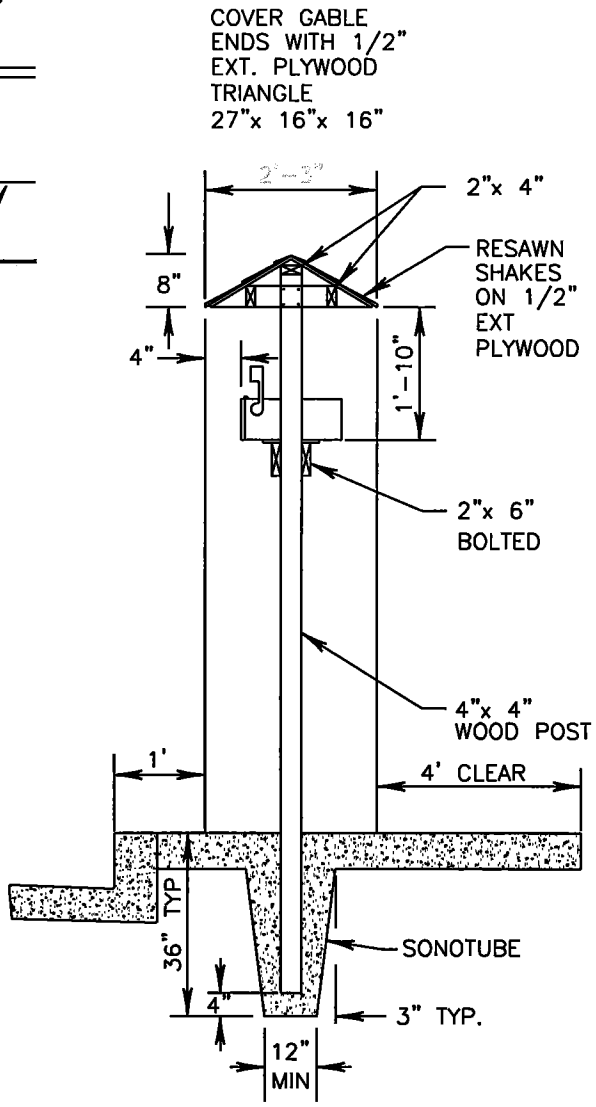

SECTION A–A

NOTES:

1 MAILBOX MUST BE POSTMASTER APPROVED WITH A UNIFORM BOX STYLE AND METHOD OF ADDRESS IDENTIFICATION.

2 LOCATION IS SUBJECT TO APPROVAL BY THE PUBLIC WORKS DIRECTOR AND IS TO BE SHOWN ON STREET IMPROVEMENT PLANS.

3 THE SKETCH DEPICTS A MINIMUM STRUCTURAL AND DIMENSIONAL STANDARD. INNOVATIVE DESIGNS MEETING OR EXCEEDING THIS MINIMUM STANDARD MUST BE APPROVED BY THE PUBLIC WORKS DIRECTOR.

4 ALL WOOD TO BE PRESSURE TREATED FIR OR HEMLOCK.

N.T.S.

City of Woodinville DEPARTMENT OF PUBLIC WORKS	MULTIPLE MAILBOX STRUCTURE INSTALLATION	338 revision date NOV, 98

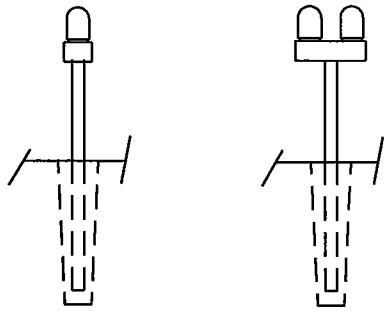

TYPICAL CONFIGURATIONS

QUANTITY AND LOCATIONS OF MAILBOXES SUBJECT TO APPROVAL

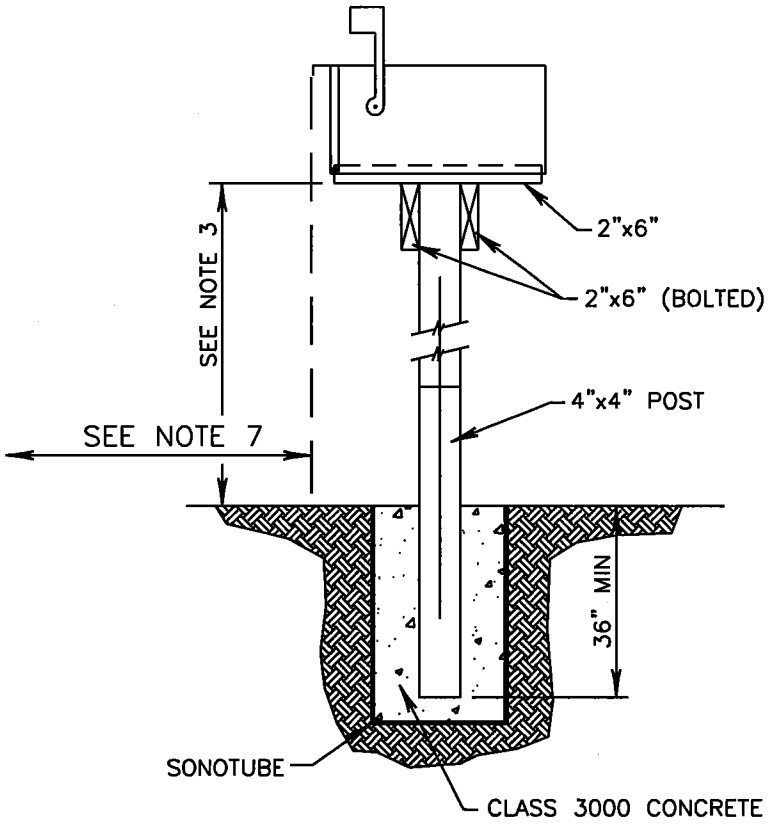

TYPICAL SECTION

NOTES:

1 FOR 1 OR 2 MAILBOXES PER STRUCTURE USE SINGLE 4"x4" POST. FOR 3 OR MORE MAILBOXES SEE STD DWG 338 OR 340.

2 ALL WOOD TO BE PRESSURE TREATED FIR OR HEMLOCK.

3 MAILBOX HEIGHT VARIES ACCORDING TO THE TYPE OF DELIVERY VEHICLE. WHERE MAIL DELIVERY IS ACCOMPLISHED BY MAIL TRUCKS ("MOUNTED" ROUTES) THE MAILBOX HEIGHTS SHALL BE 44". WHERE MAIL DELIVERY IS ACCOMPLISHED BY PASSENGER VEHICLE ("RURAL" ROUTES) THE MAILBOX HEIGHT SHALL BE 36" TO 38".

4 MAILBOXES MUST BE POSTMASTER APPROVED WITH A UNIFORM BOX STYLE AND METHOD OF ADDRESS IDENTIFICATION.

5 LOCATIONS OF MAILBOXES ARE SUBJECT TO APPROVAL BY THE PUBLIC WORKS DEPARTMENT FOR PROTECTION OF VIEWS AND ACCESS.

6 THIS DRAWING DEPICTS A MINIMUM STRUCTURAL AND DIMENSIONAL STANDARD. INNOVATIVE DESIGNS MEETING OR EXCEEDING THIS MINIMUM STANDARD MUST BE APPROVED BY THE PUBLIC WORKS DIRECTOR.

7 MAILBOX STRUCTURE PLACEMENT

A– CURB AND SIDEWALK OR CURB ONLY
ALL STRUCTURES SHALL BE PLACED 2 FT. BACK OF THE FACE OF CURB. A MIN. 4 FT. CLEARANCE TO BACK OF SIDEWALK SHALL BE MAINTAINED. NO PORTION OF THE BOX OR STRUCTURE SHALL PROTRUDE INTO THE CURB.

B– NO CURB
SETBACK WILL BE SET BY THE POSTMASTER.

N.T.S.

City of Woodinville DEPARTMENT OF PUBLIC WORKS	MAILBOX STRUCTURE FOR ONE OR TWO BOXES	339 revision date NOV, 98

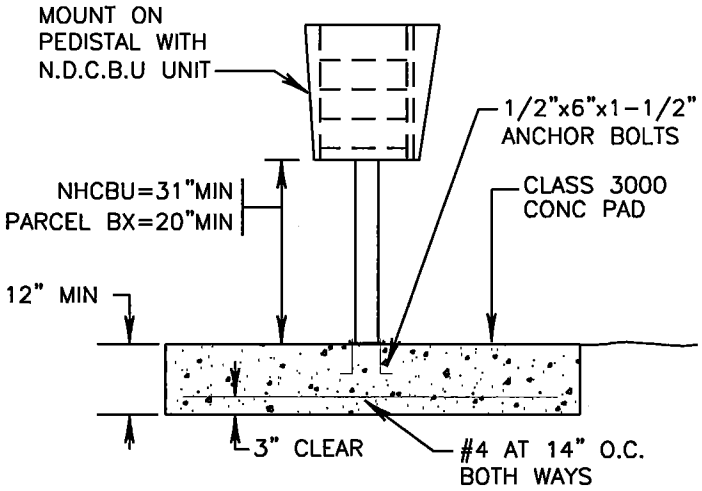

FRONT ELEVATION

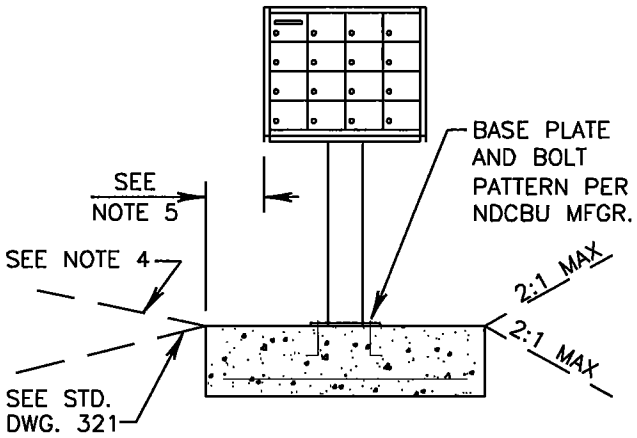

SIDE ELEVATION

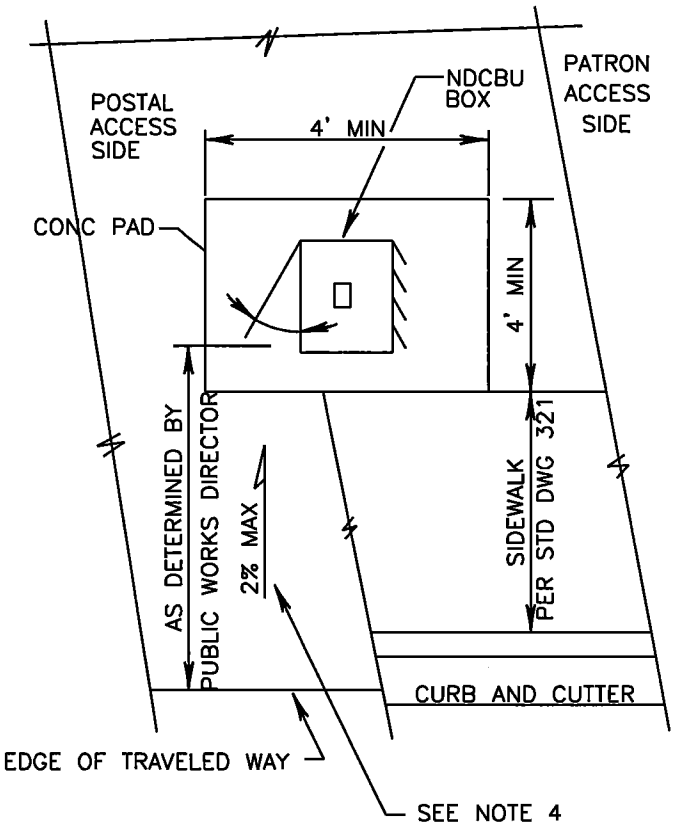

SETBACK PLAN

N.T.S.

City of Woodinville DEPARTMENT OF PUBLIC WORKS	N.D.C.B.U. MAILBOX CLUSTER (SHEET 1 OF 2)	340 revision date NOV, 98

NOTES:

1. THIS DRAWING DEPICTS A MINIMUM STRUCTURAL AND DIMENSIONAL STANDARD FOR NEIGHBORHOOD DELIVERY & COLLECTION BOX UNIT (NDCBU) AND PADS. FOR SPECIFIC POSTAL REQUIREMENTS CONTACT THE POSTMASTER.
2. MAILBOXES MUST BE POSTMASTER APPROVED WITH A UNIFORM BOX STYLE AND METHOD OF ADDRESS IDENTIFICATION.
3. LOCATIONS OF MAILBOXES ARE SUBJECT TO APPROVAL BY THE PUBLIC WORKS DEPARTMENT.
4. INSTALLATION OF DRAINAGE CULVERT MAY BE NECESSARY IN AREAS WHERE THERE IS NO CONCRETE SIDEWALK AND THE REQUIRED SETBACK SPANS A ROADSIDE DITCH. ACCESS TO SUCH STRUCTURES WILL HAVE A MAX. SLOPE OF 2%. AND SHALL HAVE A PAD CONSISTING OF A MINIMUM OF 4" OF CRUSHED SURFACING TOP COURSE COMPACTED TO 95% MAXIMUM DENSITY.
5. ALL MAILBOX STRUCTURES SHALL BE PLACED BACK OF SIDEWALK WITH NO PORTION OF BOX OR STRUCTURE PROTRUDING INTO THE SIDEWALK. IF NO SIDEWALK EXISTS SETBACK WILL BE SET BY THE POST MASTER.
6. SUGGESTED SOURCE SECURITY MFG CORP (800) 762-6937, 8000 SERIES PEDESTAL BOXES, SALSBURY INDUSTRIES (800) 323-3003 OR POSTMASTER APPROVED EQUAL.
7. PLACEMENT LOCATION OF PEDESTAL PARCEL LOCKER WILL BE APPROVED BY THE PUBLIC WORKS DIR. AND THE POSTMASTER.

N.T.S.

City of Woodinville DEPARTMENT OF PUBLIC WORKS	N.D.C.B.U. MAILBOX CLUSTER (SHEET 2 OF 2)	340 revision date NOV, 98

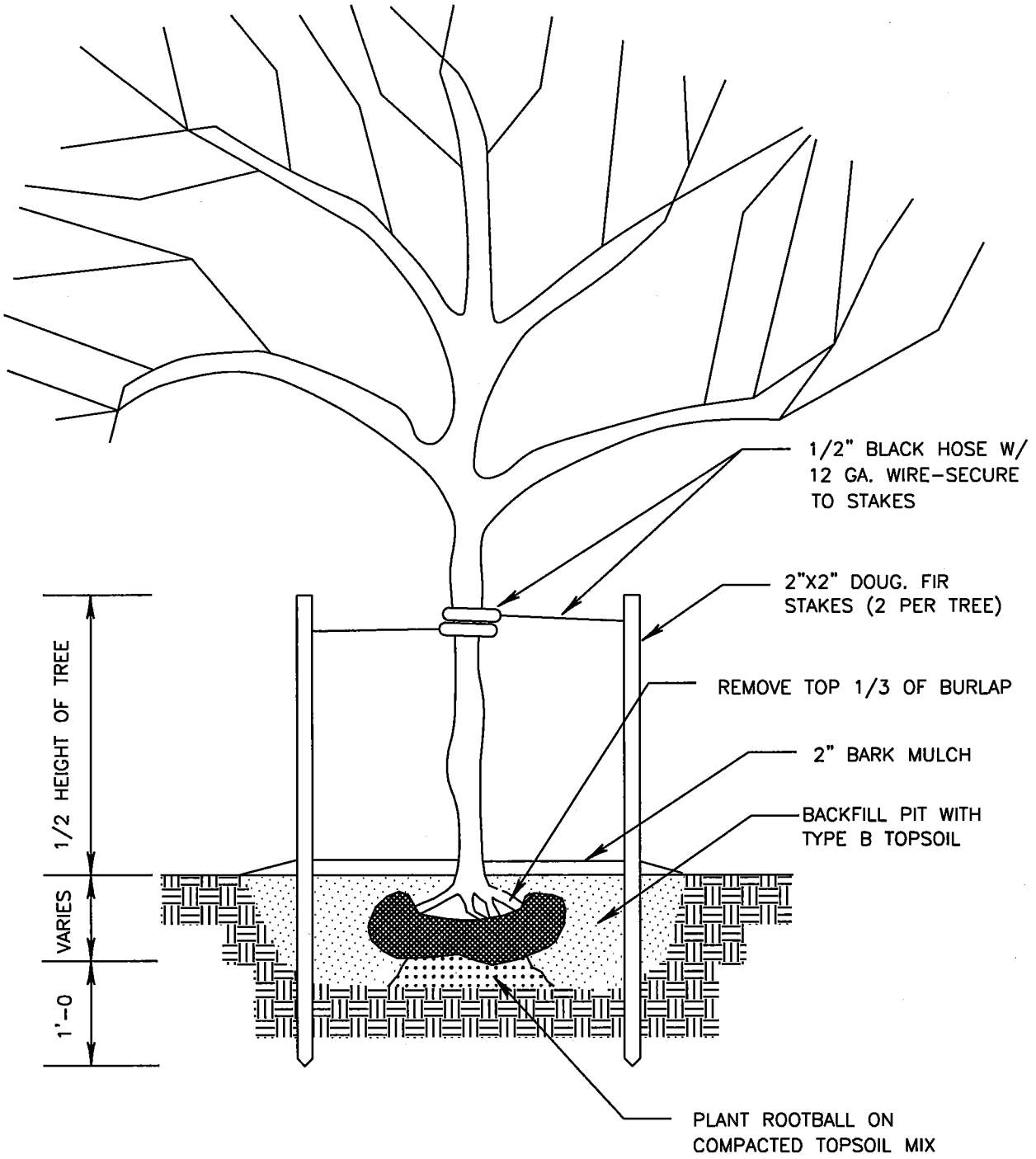

TREE PLANTING AND STAKING DETAIL

NTS

NOTES:

1 TREE PLANTING SHALL CONFORM TO THE REQUIREMENTS OF SECTION 8-02 OF THE WSDOT/APWA STANDARD SPECIFICATIONS AND CITY OF WOODINVILLE TREE BOARD.

2 FOR PLANTING ADJACENT TO SIDEWALK, ROOT BARRIER SHALL BE USED.

N.T.S.

City of Woodinville DEPARTMENT OF PUBLIC WORKS	TYPICAL TREE PLANTING	341 revision date NOV, 98

*– SPACING PER WOODINVILLE MUNICIPAL CODE.

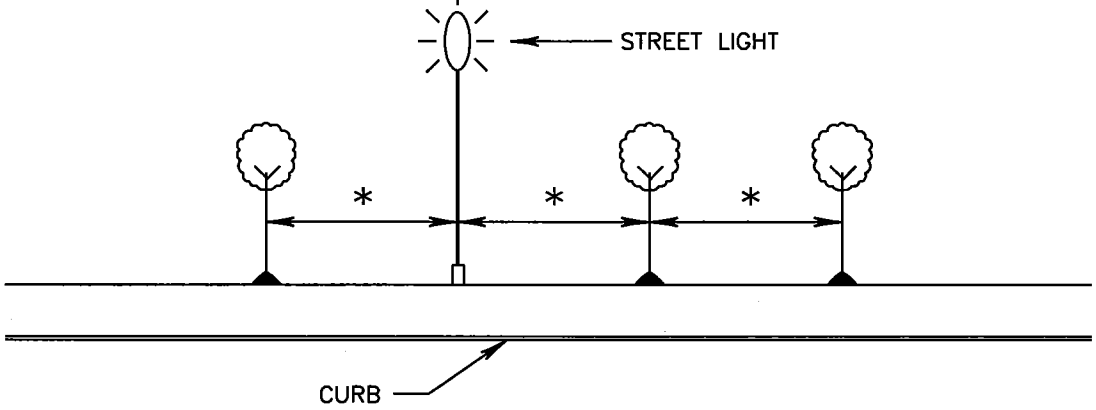

TYPICAL SECTION

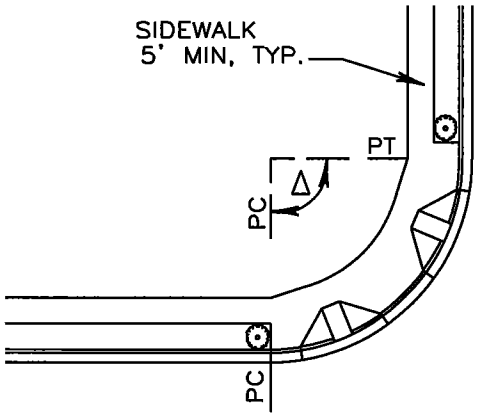

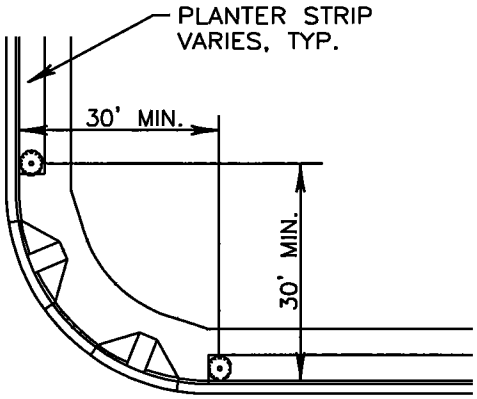

TYPICAL TREE
LOCATION AT
4–WAY INTERSECTION

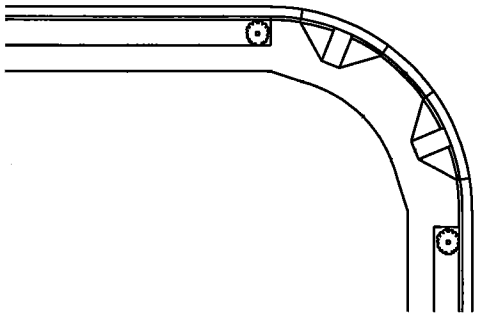

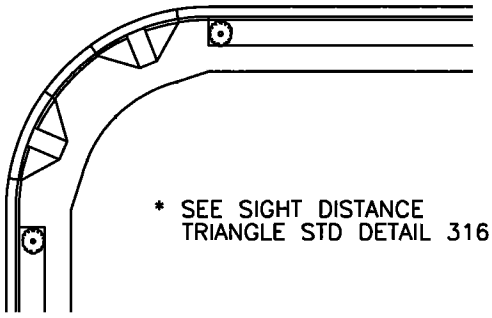

* SEE SIGHT DISTANCE
TRIANGLE STD DETAIL 316

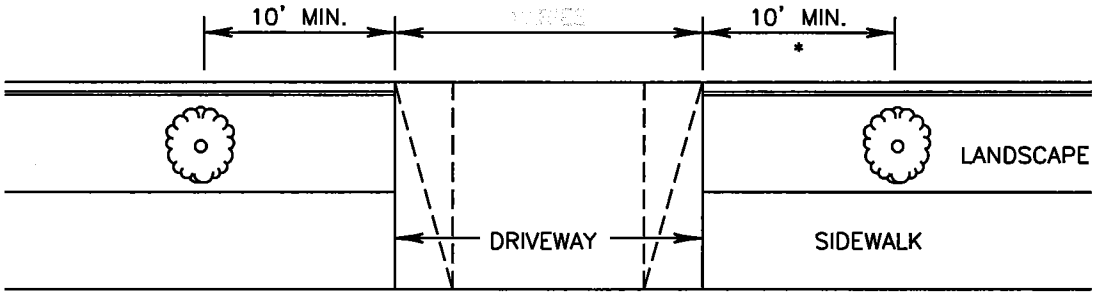

N.T.S.

City of Woodinville DEPARTMENT OF PUBLIC WORKS	STREET TREE LOCATION	342 revision date NOV, 98

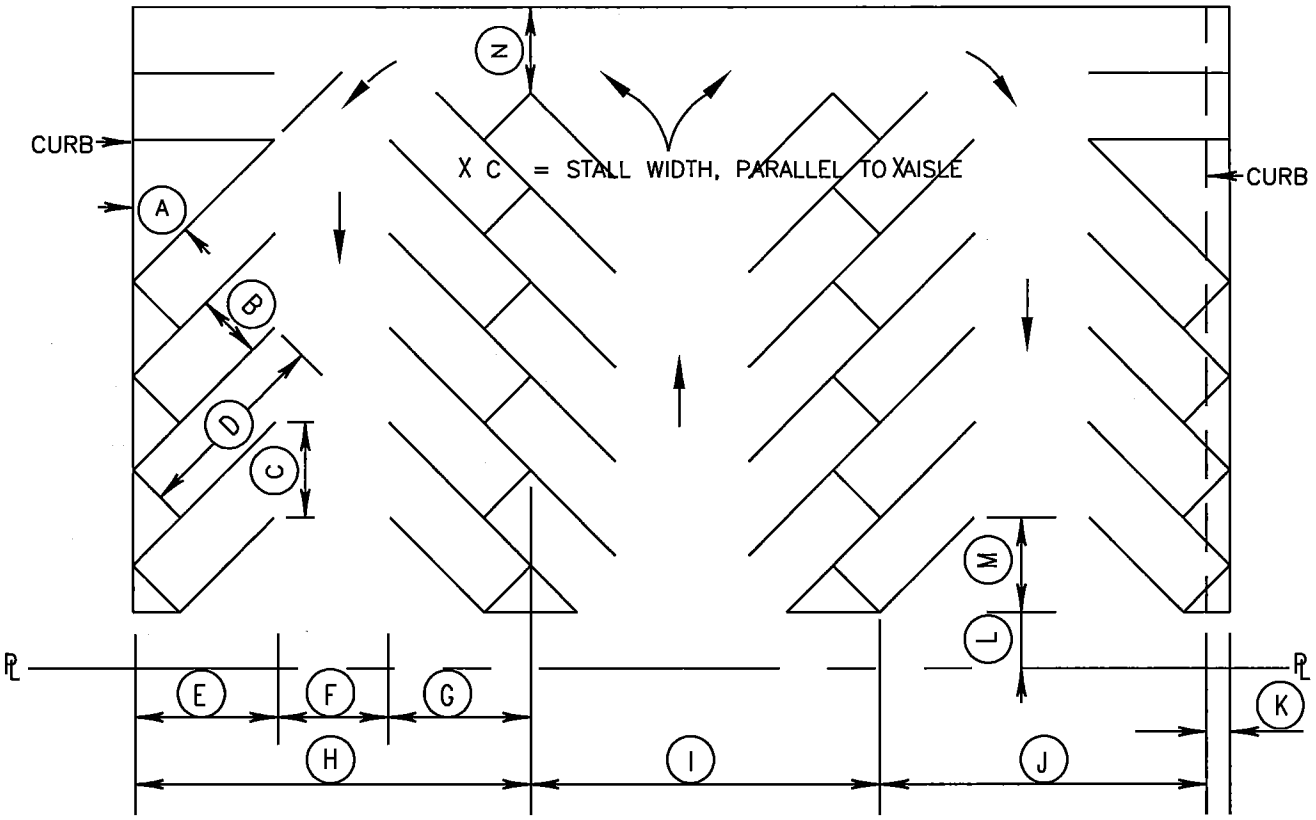

(A) PARKING ANGLE

(B) STALL WIDTH, PERPENDICULAR TO STALL LINES

(C) STALL WIDTH, PARALLEL TO AISLE

(D) LENGTH OF STALL LINE

(E) STALL DEPTH,PERPENDICULAR TO AISLE

(F) AISLE WIDTH, BETWEEN STALL LINES

(G) STALL DEPTH, INTERLOCKING

(H) MODULE, WALL TO INTERLOCK

(I) MODULE, INTERLOCK TO INTERLOCK

(J) MODULE, INTERLOCK TO CURB

(K) BUMPER OVERHANG

(L) OFFSET

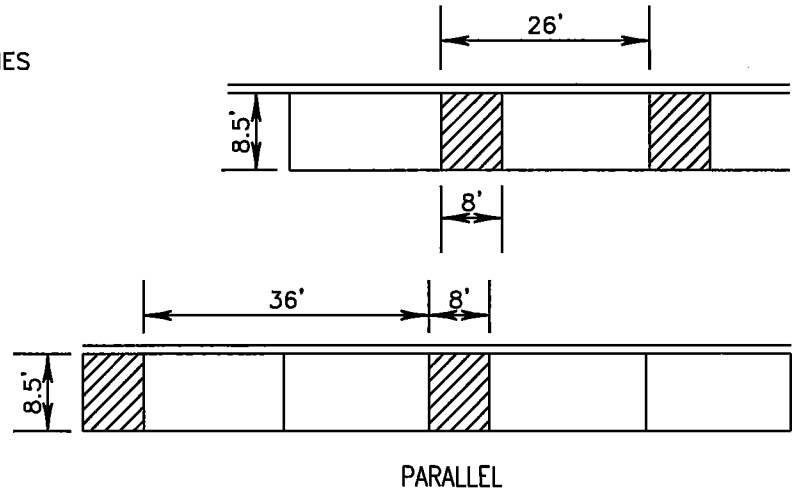

(M) SETBACK

(N) CROSS AISLE, ONE WAY

(N) CROSS AISLE, TWO WAY

(X) STALL NOT ACCESSIBLE IN CERTAIN LAYOUTS

NOTES:

1 SEE ZONING CODE FOR DIMENSIONS AND FOR FURTHER CONDITIONS AND RESTRICTIONS.

N.T.S.

City of Woodinville DEPARTMENT OF PUBLIC WORKS	TYPICAL PARKING LAYOUT	343A revision date NOV, 98

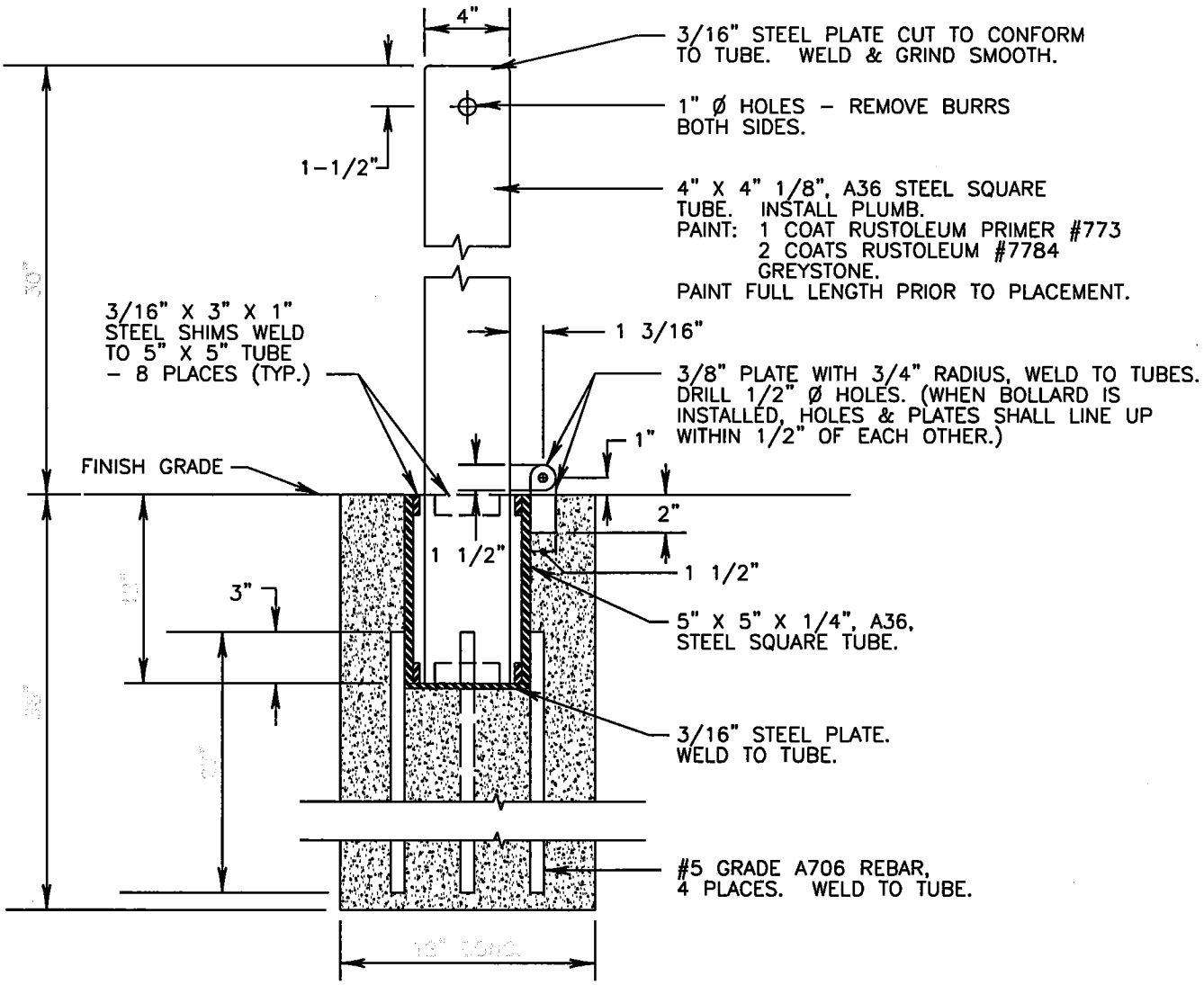

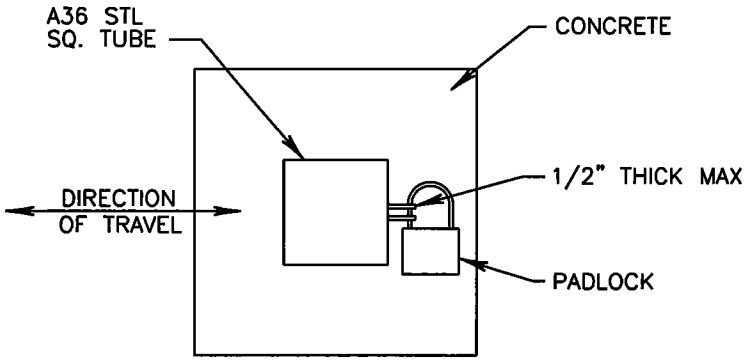

NOTES:

1. DO NOT INSTALL 4" X 4" POST UNTIL CONCRETE IS COMPLETELY CURED.
2. PROVIDE PADLOCK KEYED TO CITY OF WOODINVILLE STANDARDS.

N.T.S.

City of Woodinville DEPARTMENT OF PUBLIC WORKS	REMOVABLE BOLLARD	345A revision date NOV, 98

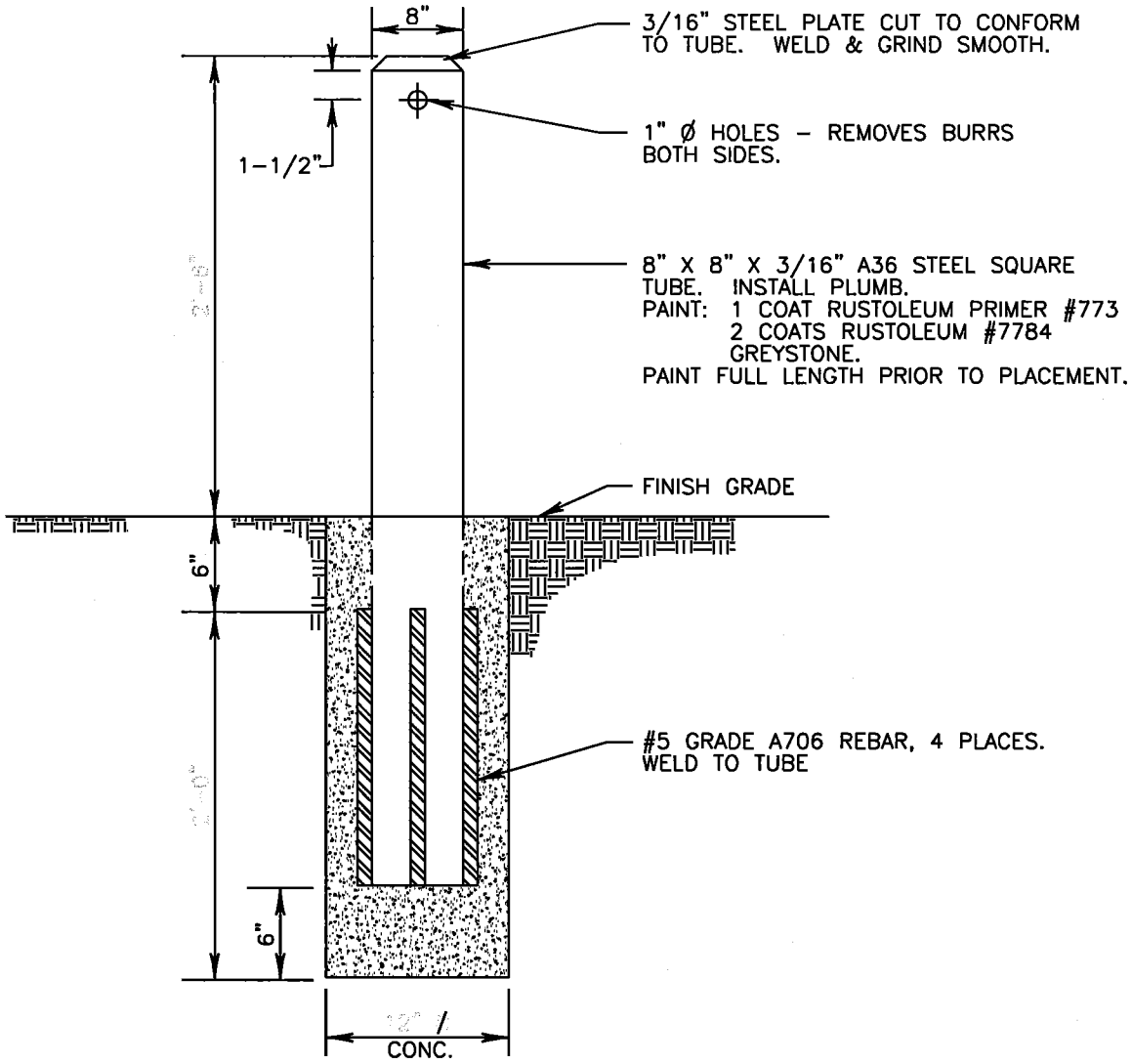

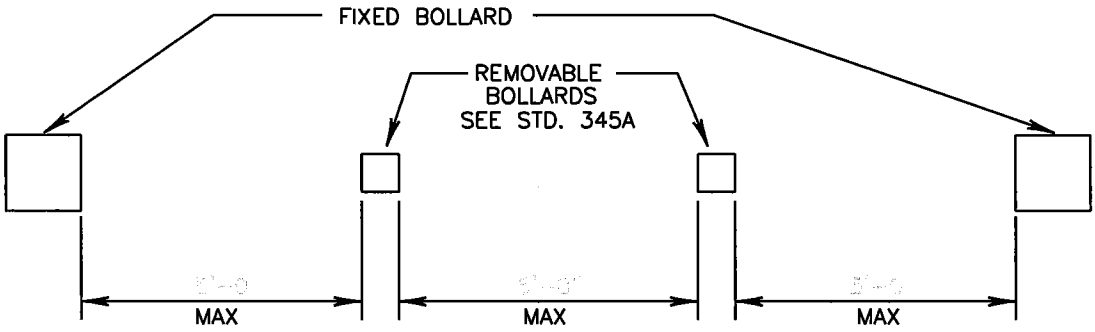

NOTES:

1 SPACE BOLLARDS – SEE DIAGRAM.

2 ADD REMOVABLE BOLLARDS PER STD. DETAIL 345A AS REQUIRED FOR WIDER ACCESS ROADS. EVENLY SPACE CENTER BOLLARDS AS INDICATED.

N.T.S.

City of Woodinville DEPARTMENT OF PUBLIC WORKS	FIXED BOLLARD	345B revision date NOV, 98

THIS DRAWING HAS BEEN SCALED FOR REPRO PURPOSES, SEE KCSTRIP1-7.DWG

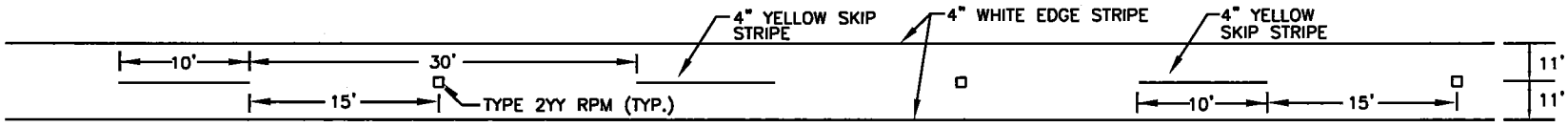

STANDARD MARKINGS FOR TWO-LANE, TWO-WAY TRAFFIC

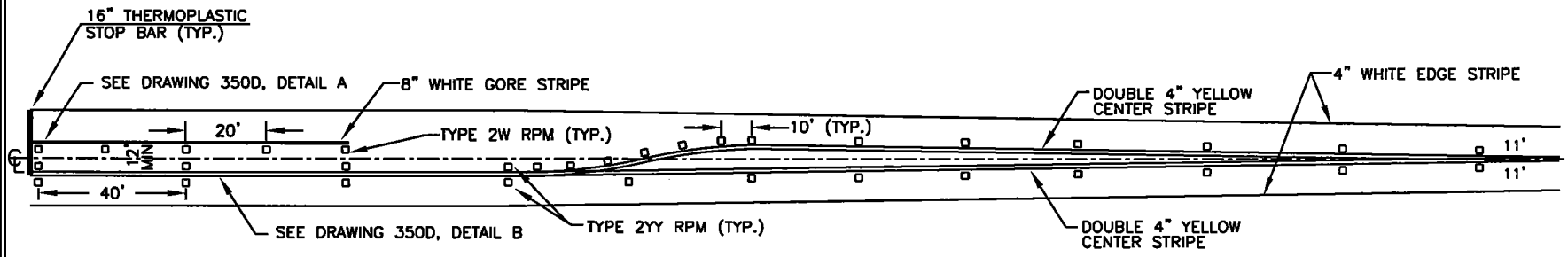

STANDARD MARKINGS FOR LEFT TURN LANE

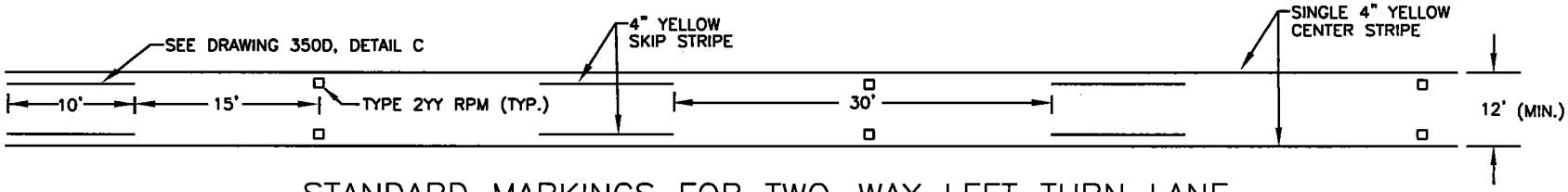

STANDARD MARKINGS FOR TWO-WAY LEFT TURN LANE

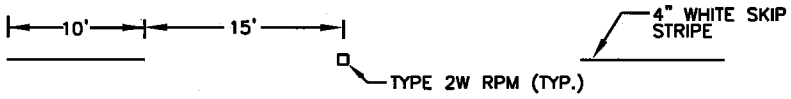

TRAVEL DIRECTION

STANDARD LANE MARKINGS

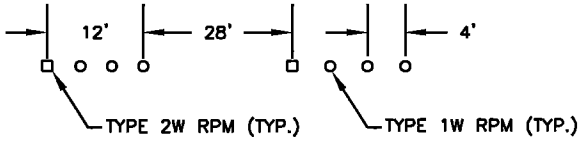

TRAVEL DIRECTION

ALTERNATE LANE MARKINGS

N.T.S.

City of Woodinville DEPARTMENT OF PUBLIC WORKS	PAVEMENT MARKINGS	350A revision date NOV. 98

THIS DRAWING HAS BEEN SCALED FOR REPRO PURPOSES, SEE KCSTRIP1-7.DWG

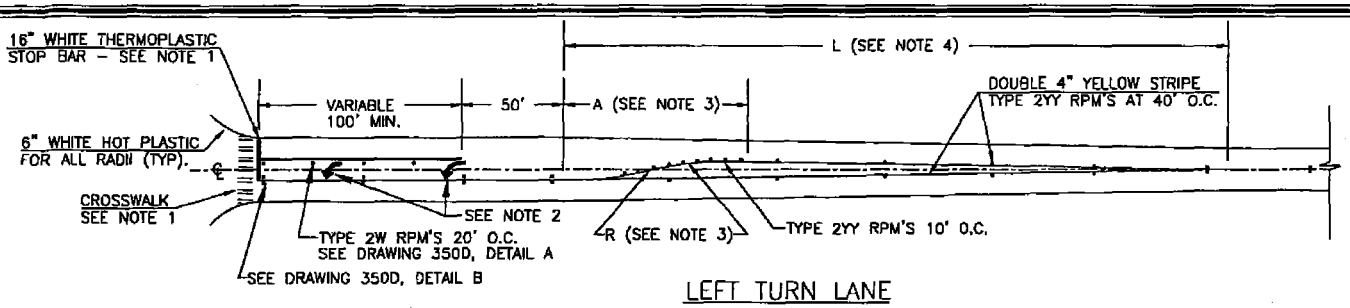

LEFT TURN LANE

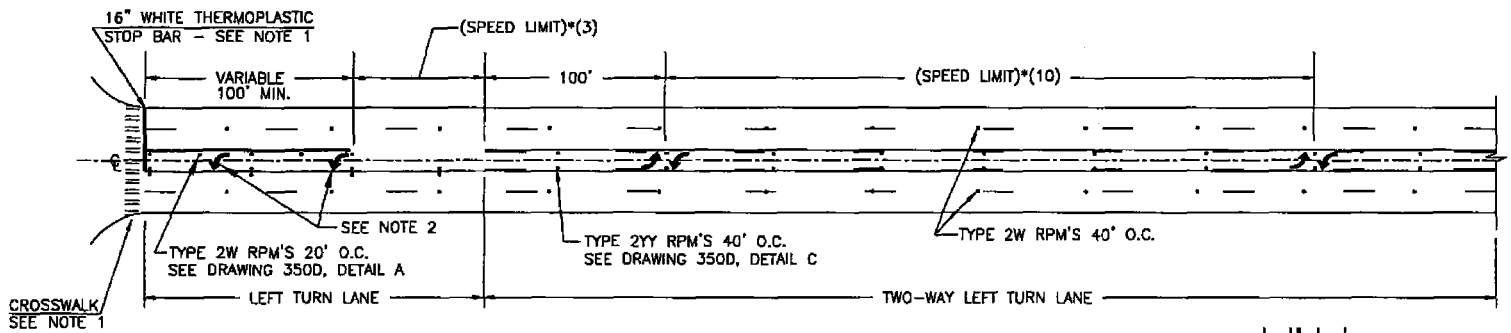

TWO-WAY LEFT TURN LANE

NOTES

1. STOP BAR IS PLACED BASED ON THE DESIGN TURNING VEHICLE. STOP BAR IS PLACED 4' BEHIND THE CROSSWALK.
2. TYPE 2L ARROW IS INSTALLED 40' BACK OF STOP BAR. SECOND ARROW IS LOCATED AT BEGINNING OF POCKET. FOR LONGER TURN POCKET LENGTHS, MAXIMUM ARROW SPACING SHALL BE 150'.
3. A=85', R=150' FOR POSTED SPEED LESS THAN 40 MPH. A=120', R=300' FOR POSTED SPEED GREATER THAN OR EQUAL TO 40 MPH.
4. $L=\frac{W_T}{2} * S_{SL}$ FOR SYMMETRICAL WIDENING. W_T=LEFT TURN LANE WIDTH.
   $L=W_T * S_{SL}$ FOR NON-SYMMETRICAL WIDENING. S_{SL}=POSTED SPEED LIMIT, WHERE W_T IS THE GREATER OFFSET WIDTH.

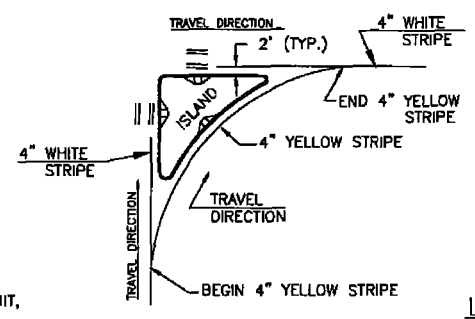

ISLAND STRIPING DETAIL

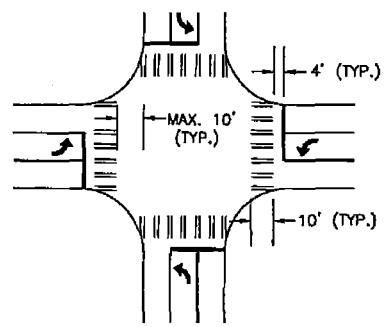

STOP BAR AND CROSSWALK LAYOUT FOR TYPICAL INTERSECTION

N.T.S.

City of Woodinville DEPARTMENT OF PUBLIC WORKS	PAVEMENT MARKINGS	350B revision date NOV, 98

THIS DRAWING HAS BEEN SCALED FOR REPRO PURPOSES, SEE KCSTRIP1-7.DWG

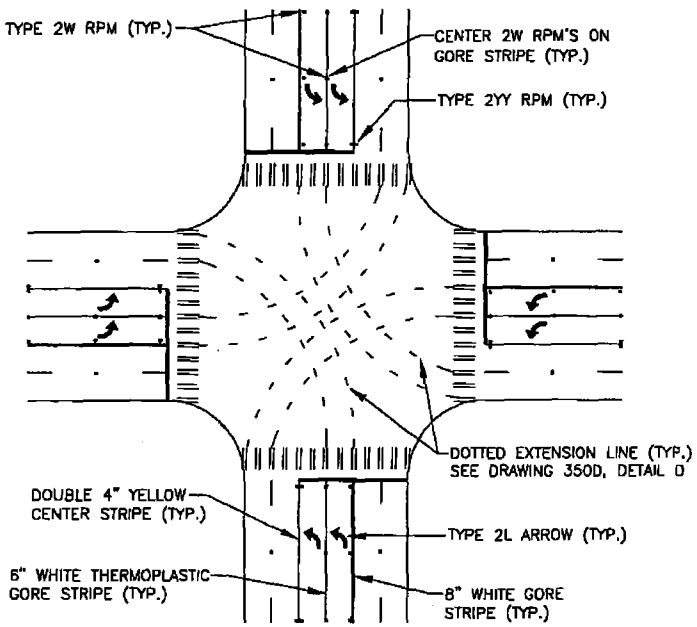

DUAL LEFT TURN LANES

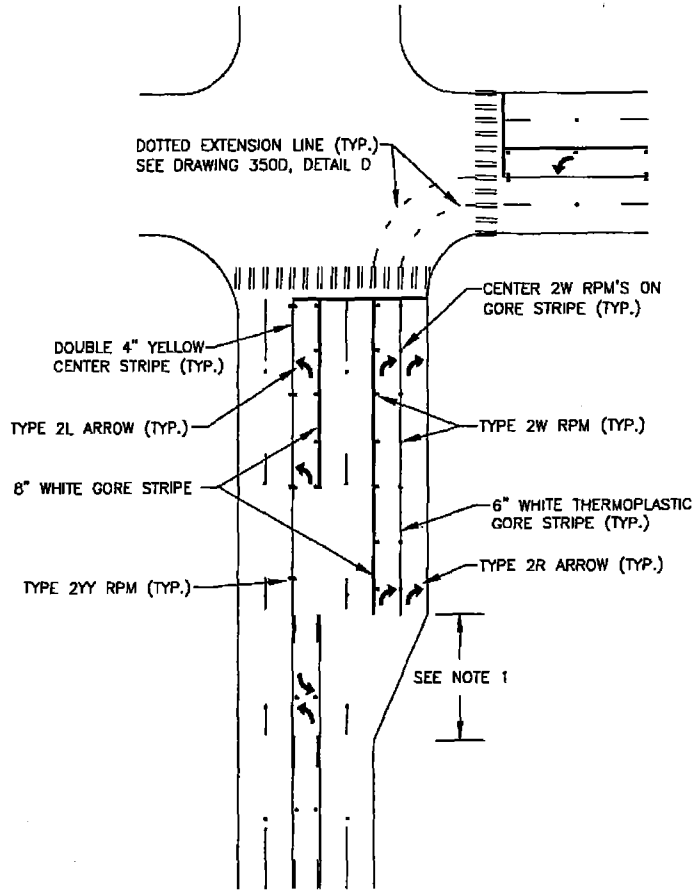

DUAL RIGHT TURN LANES

N.T.S.

NOTES

1. TAPER RATE FOR DUAL RIGHT TURN LANES SHALL BE 100 FEET. TAPER RATE FOR A SINGLE RIGHT TURN LANE SHALL BE 50 FEET.
2. FOR RPM SPACING, SEE DRAWING 350A. FOR RPM DETAILS, SEE DRAWING 350D.
3. FOR ARROW SPACING, SEE DRAWING 350B. FOR ARROW DETAILS, SEE DRAWING 350E.
4. DRAWINGS ARE SCHEMATIC AND SHOW PAVEMENT MARKINGS ONLY. THEY DO NOT REFLECT EXACT ROADWAY AND INTERSECTION GEOMETRICS.

City of Woodinville DEPARTMENT OF PUBLIC WORKS	PAVEMENT MARKINGS	350C revision date NOV, 98

THIS DRAWING HAS BEEN SCALED FOR REPRO PURPOSES, SEE KCSTRIP1-7.DWG

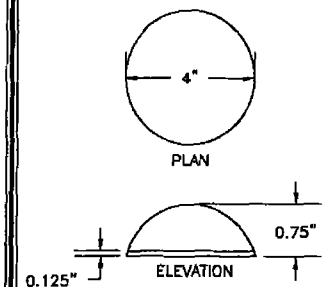

TYPE 1 RPM

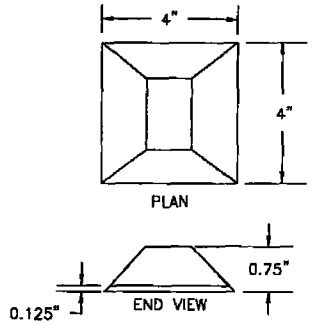

TYPE 2 RPM

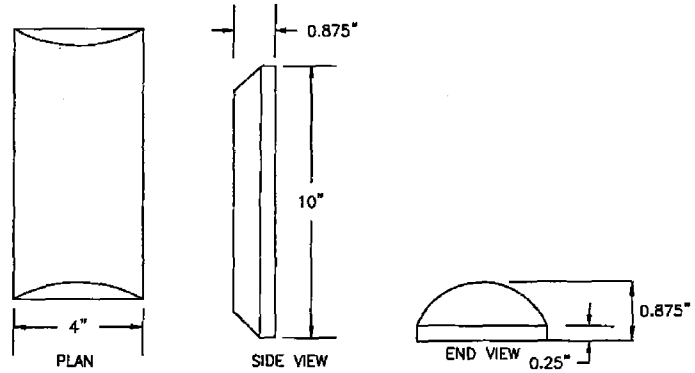

TYPE 3 RPM

TYPE 2 RPM RAISED FACE COLORS	
TYPE 2YY	REFLECTORIZED YELLOW & YELLOW
TYPE 2W	REFLECTORIZED WHITE - ONE SIDE ONLY
TYPE 2Y	REFLECTORIZED YELLOW - ONE SIDE ONLY
TYPE 1 RPM COLORS	
TYPE 1W	WHITE: NON-REFLECTORIZED
TYPE 1Y	YELLOW: NON-REFLECTORIZED

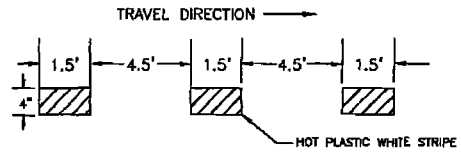

DETAIL D - EXTENSION SKIP STRIPE

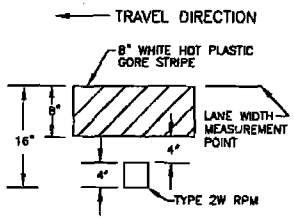

DETAIL A - GORE STRIPE

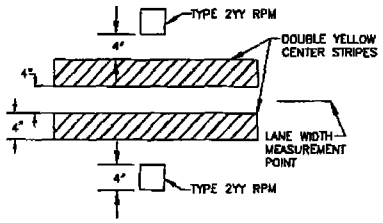

DETAIL B - CENTERLINE

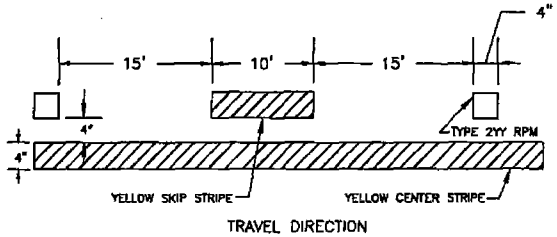

DETAIL C - TWO-WAY LEFT TURN LANE

N.T.S.

City of Woodinville

DEPARTMENT OF PUBLIC WORKS

PAVEMENT MARKINGS

350D

revision date NOV, 98

THIS DRAWING HAS BEEN SCALED FOR REPRO PURPOSES, SEE KCSTRIP1-7.DWG

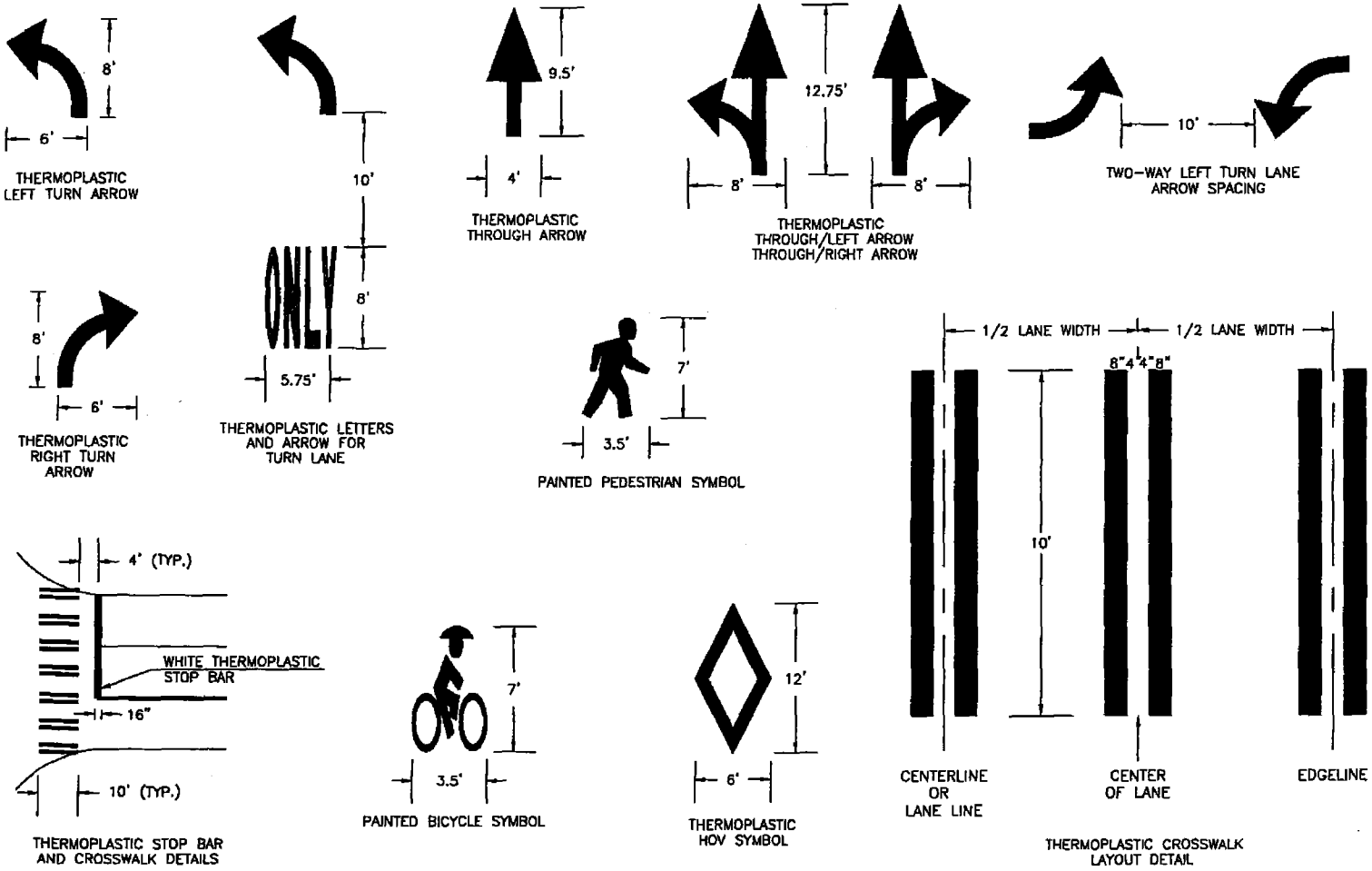

City of Woodinville DEPARTMENT OF PUBLIC WORKS	PAVEMENT MARKINGS	350E revision date NOV, 98

THIS DRAWING HAS BEEN SCALED FOR REPRO PURPOSES, SEE KCSTRIP1-7.DWG

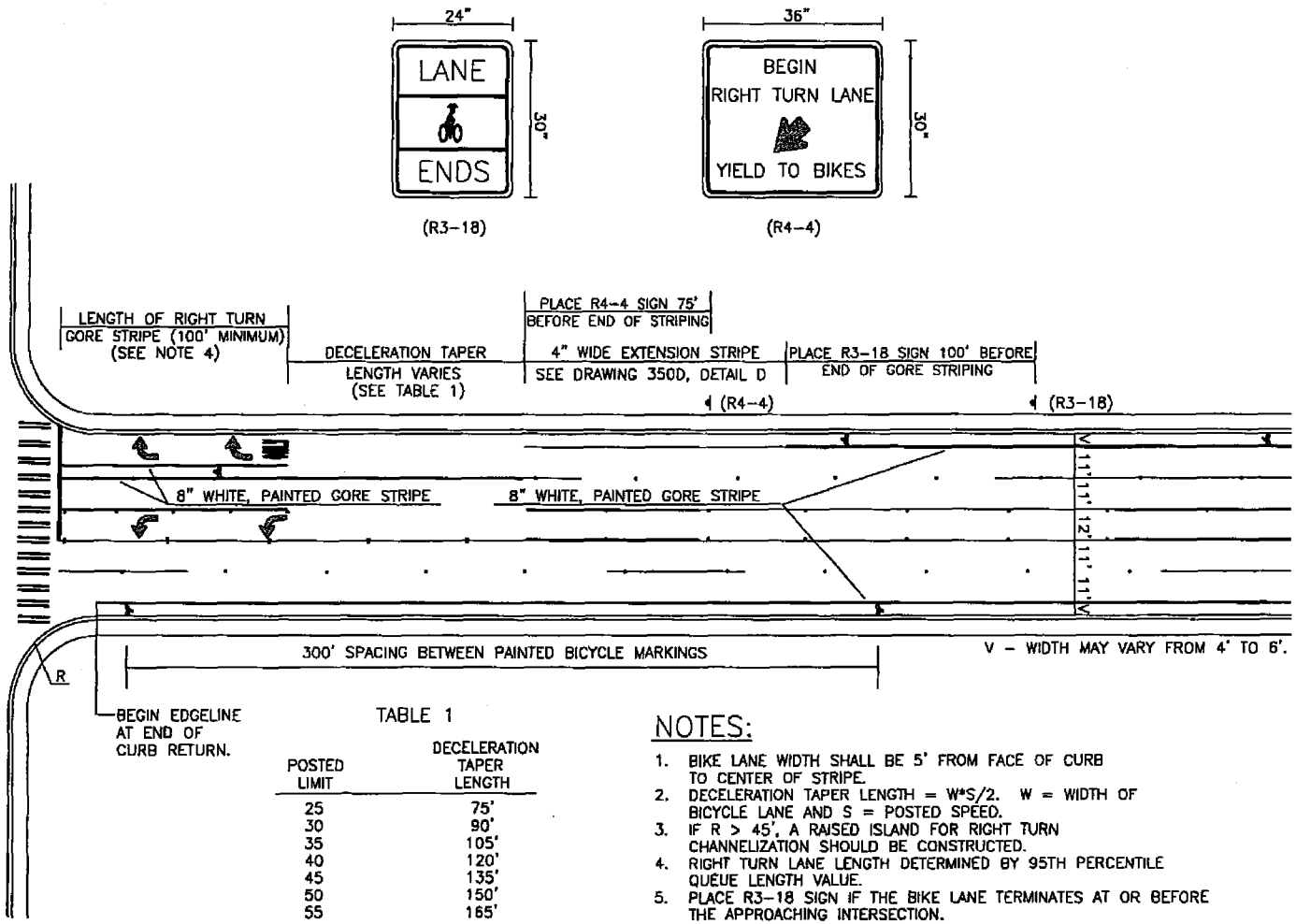

TABLE 1

POSTED LIMIT	DECELERATION TAPER LENGTH
25	75'
30	90'
35	105'
40	120'
45	135'
50	150'
55	165'

NOTES:

1. BIKE LANE WIDTH SHALL BE 5' FROM FACE OF CURB TO CENTER OF STRIPE.
2. DECELERATION TAPER LENGTH = W*S/2. W = WIDTH OF BICYCLE LANE AND S = POSTED SPEED.
3. IF R > 45', A RAISED ISLAND FOR RIGHT TURN CHANNELIZATION SHOULD BE CONSTRUCTED.
4. RIGHT TURN LANE LENGTH DETERMINED BY 95TH PERCENTILE QUEUE LENGTH VALUE.
5. PLACE R3-18 SIGN IF THE BIKE LANE TERMINATES AT OR BEFORE THE APPROACHING INTERSECTION.

N.T.S.

City of Woodinville

DEPARTMENT OF PUBLIC WORKS

BICYCLE LANE MARKINGS
(RIGHT TURN ONLY)

350F

revision date
NOV, 98

THIS DRAWING HAS BEEN SCALED FOR REPRO PURPOSES, SEE KCSTRIP1-7.DWG

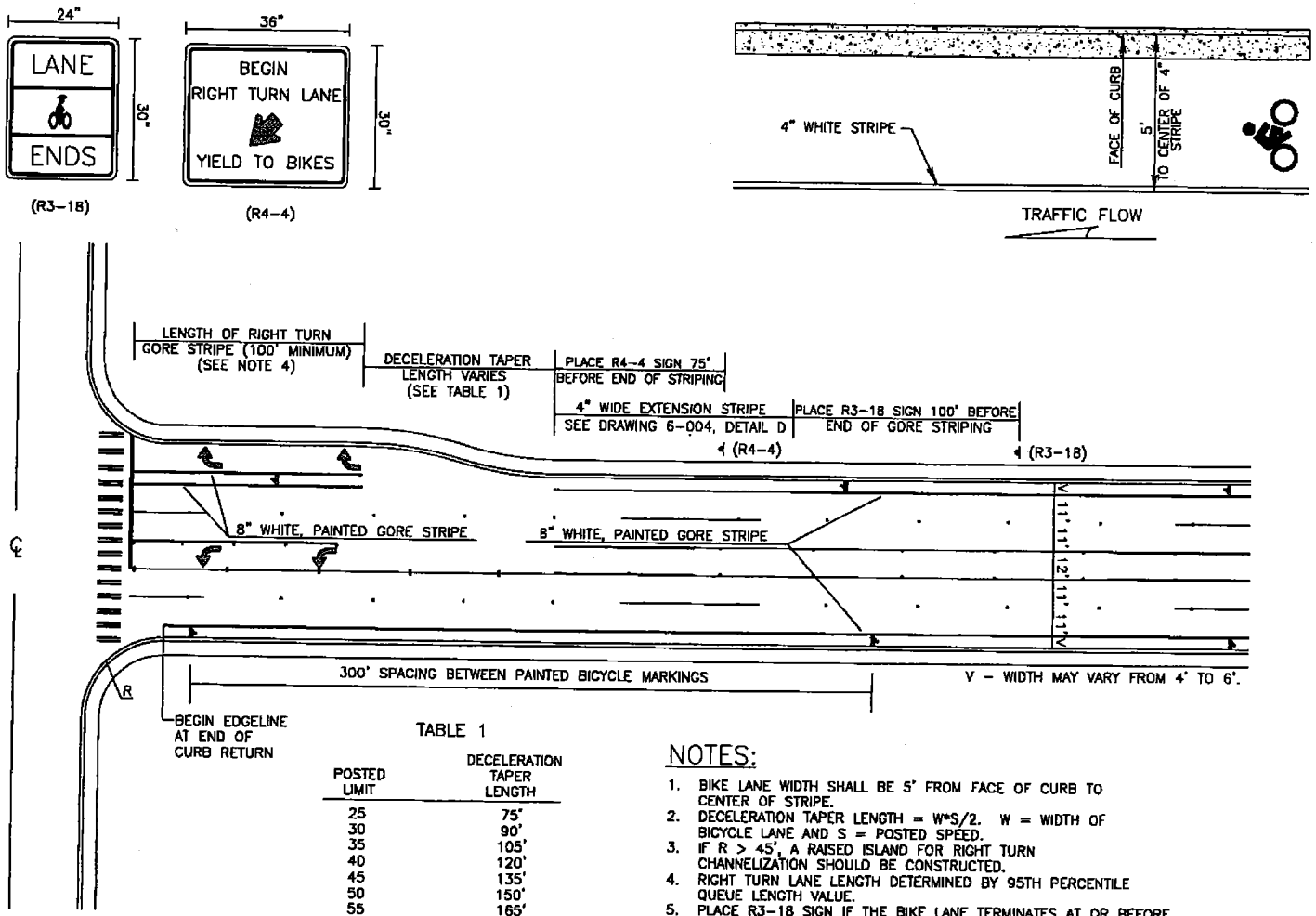

TABLE 1

POSTED LIMIT	DECELERATION TAPER LENGTH
25	75'
30	90'
35	105'
40	120'
45	135'
50	150'
55	165'

NOTES:

1. BIKE LANE WIDTH SHALL BE 5' FROM FACE OF CURB TO CENTER OF STRIPE.
2. DECELERATION TAPER LENGTH = W*S/2. W = WIDTH OF BICYCLE LANE AND S = POSTED SPEED.
3. IF R > 45', A RAISED ISLAND FOR RIGHT TURN CHANNELIZATION SHOULD BE CONSTRUCTED.
4. RIGHT TURN LANE LENGTH DETERMINED BY 95TH PERCENTILE QUEUE LENGTH VALUE.
5. PLACE R3-18 SIGN IF THE BIKE LANE TERMINATES AT OR BEFORE THE APPROACHING INTERSECTION.

N.T.S.

City of Woodinville

DEPARTMENT OF PUBLIC WORKS

BICYCLE LANE MARKINGS (RIGHT TURN ONLY)

350G

revision date NOV, 98

PROJECT SIZE	LENGTH OF	
	QUARRY SPALLS	ATB
≤ 1/4 ACRE	30	0
≤ 1 ACRE	50	0
< 3 ACRE	100	0
> 3 ACRE	100	50

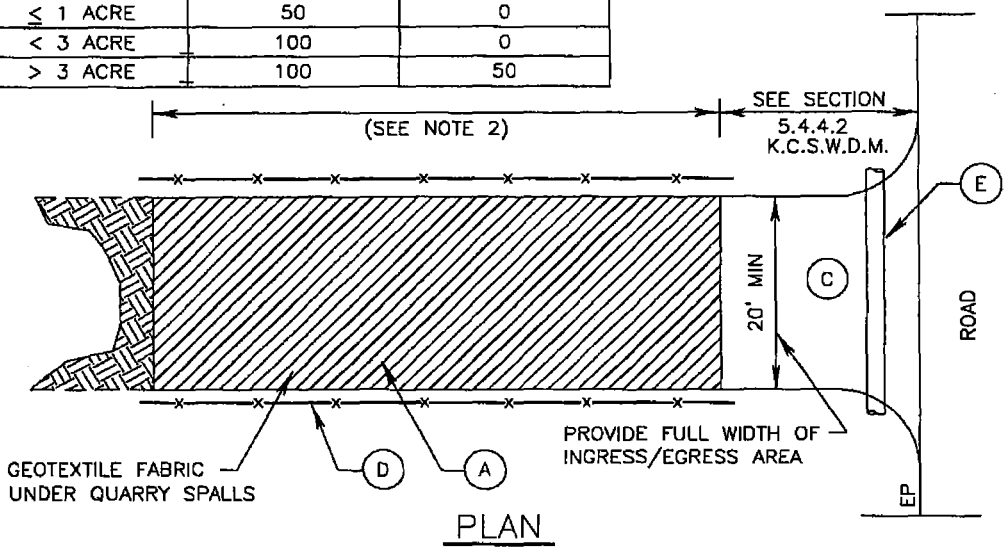

PLAN

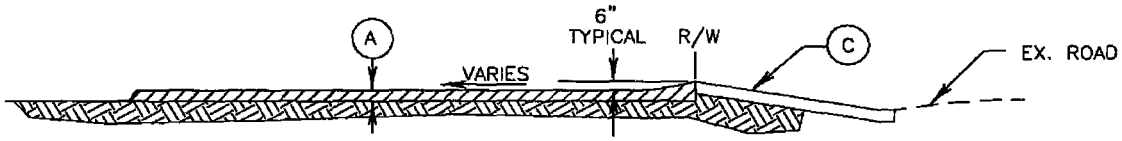

SECTION

(A) 4" TO 8" QUARRY SPALLS (12" MIN. THICKNESS) AS SPECIFIED IN SECTION 9-13.6 OF THE WSDOT/APWA STANDARD SPECIFICATIONS.

(B) THE MINIMUM LENGTH SHALL BE LENGTHENED AS NECESSARY TO ENSURE MATERIAL IS NOT TRACKED INTO THE PUBLIC RIGHT-OF-WAY. ALTERNATE CONSTRUCTION ENTRANCES WILL BE ALLOWED WITH APPROVAL OF THE CITY ENGINEER ON A CASE BY CASE BASIS, WHERE PHYSICAL SITE CONDITIONS AND SIZE DICTATE

(C) ATB DRIVEWAY RAMP, OR SITE ACCESS ROAD 20' WIDE MIN. SEE TABLE ABOVE FOR REQUIRED LENGTH.

(D) INSTALL ORANGE BARRIER FENCE TO DIRECT TRAFFIC ONTO CONSTRUCTION ENTRANCE

(E) INSTALL 12" MIN. DIA. CULVERT IF A ROADSIDE DITCH IS PRESENT IN ACCORDANCE WITH KING COUNTY ROAD STANDARDS.

NOTES:

1 SURFACE WATER – ALL SURFACE WATER FLOWING OR DIVERTED TOWARD CONSTRUCTION ENTRANCES SHALL BE PIPED ACROSS THE ENTRANCE IF PIPING IS IMPRACTICAL, A MOUNTABLE BERM WITH 5:1 SLOPES WILL BE PERMITTED.

2 MAINTENANCE – THE ENTRANCE SHALL BE MAINTAINED IN A CONDITION WHICH WILL PREVENT TRACKING OR FLOWING OF SEDIMENT ONTO PUBLIC RIGHT-OF-WAY. THIS MAY REQUIRE PERIODIC TOP DRESSING WITH ADDITIONAL STONE AS CONDITIONS DEMAND AND REPAIR AND/OR CLEANOUT OF ANY MEASURES USED TO TRAP SEDIMENT. ALL SEDIMENT SPILLED, DROPPED, WASHED OR TRACKED ONTO PUBLIC RIGHT-OF-WAY MUST BE REMOVED IMMEDIATELY.

3 WHEELS SHALL BE CLEANED TO REMOVE SEDIMENT PRIOR TO ENTRANCE ONTO PUBLIC RIGHT-OF-WAY. WHEN WASHING IS USED, IT SHALL BE DONE ON AN AREA STABILIZED WITH STONE AND WHICH DRAINS INTO AN APPROVED SEDIMENT TRAPPING DEVICE.

4 PERIODIC INSPECTION AND NEEDED MAINTENANCE SHALL BE PROVIDED AFTER EACH RAIN.

N.T.S.

City of Woodinville DEPARTMENT OF PUBLIC WORKS	STABILIZED CONSTRUCTION ENTRANCE	404A revision date NOV, 98

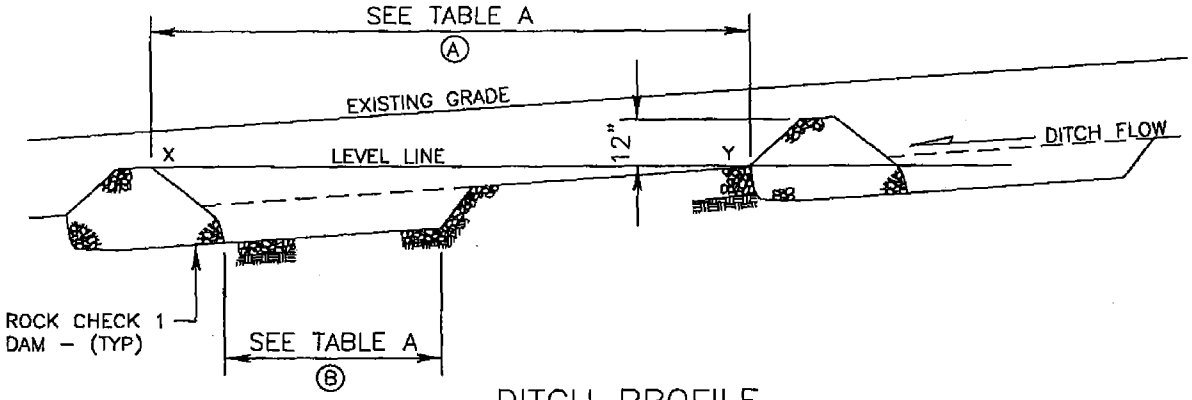

DITCH PROFILE

Ⓐ – DAM SPACING

Ⓑ – SEDIMENT TRAP LENGTH

Ⓒ – LINE THE BOTTOM OF THE SWALE WITH 4" CRUSHED SURFACING BASE COURSE.

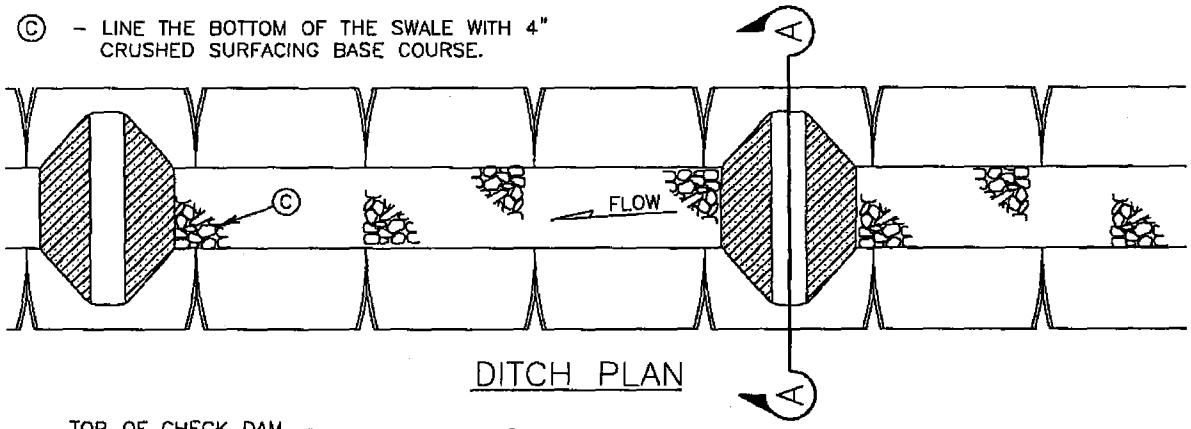

DITCH PLAN

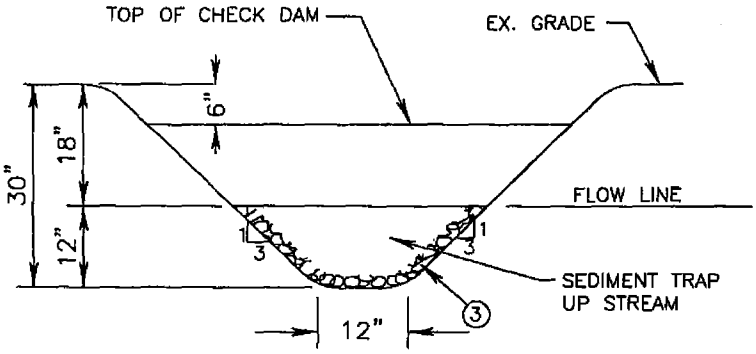

SECTION A – A

TABLE A

SLOPE FT/FT	①	②
1:100	100	10
1:50	50	10
1:25	25	5
1:20	20	4
1:15	15	3
1:10	10	2
1:5	5	0

NOTES:

1 SUMP BEHIND ROCK CHECK DAM SHALL BE INSPECTED DAILY, AND CLEANED WHEN COLLECTED DEBRIS EXCEEDS 1/2 OF ITS DEPTH.

2 THIS DETAIL NOT TO BE USED IN SANDY SILT SOILS.

N.T.S.

City of Woodinville DEPARTMENT OF PUBLIC WORKS	INTERCEPTOR DITCH WITH ROCK CHECK DAMS	405A revision date NOV, 98

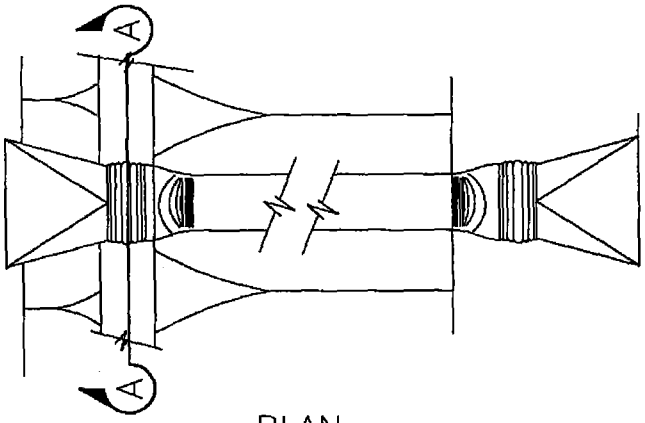

PLAN

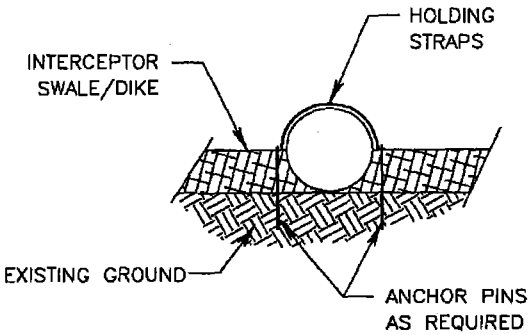

SECTION A–A

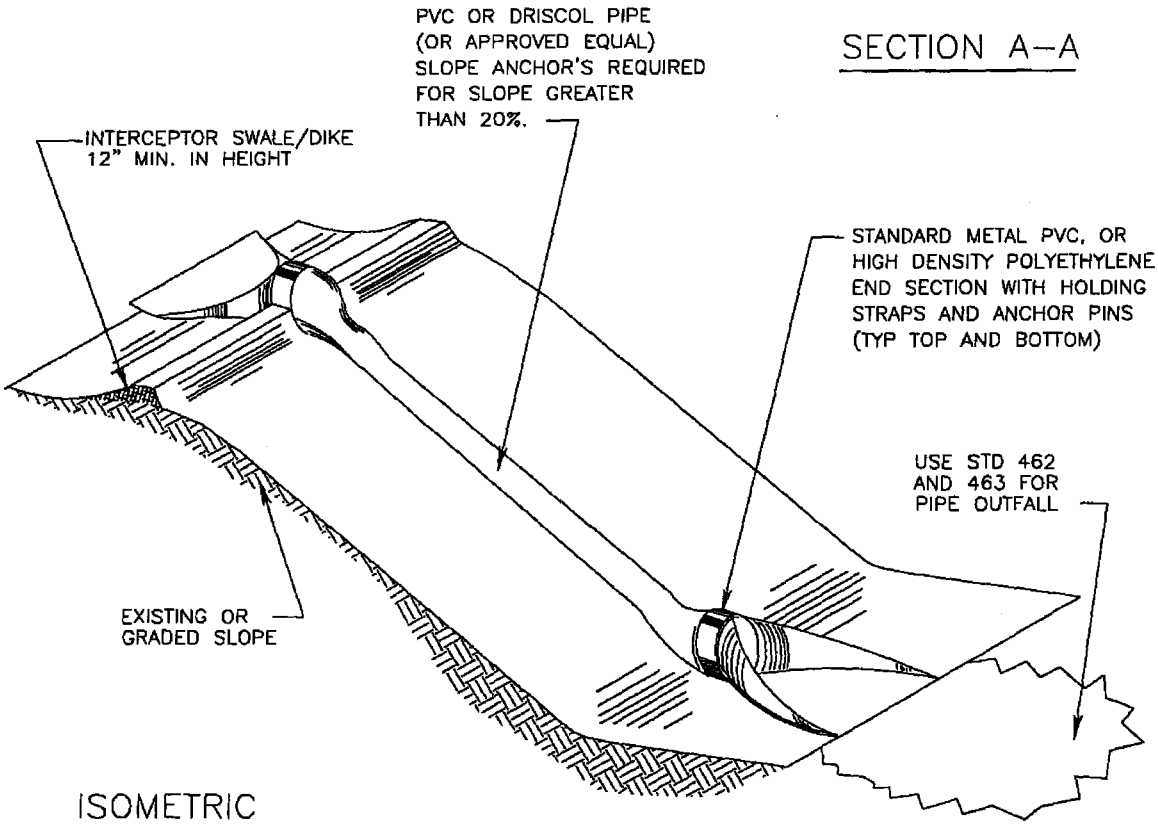

ISOMETRIC

N.T.S.

City of Woodinville DEPARTMENT OF PUBLIC WORKS	PIPE SLOPE DRAIN	405B revision date JAN, 99

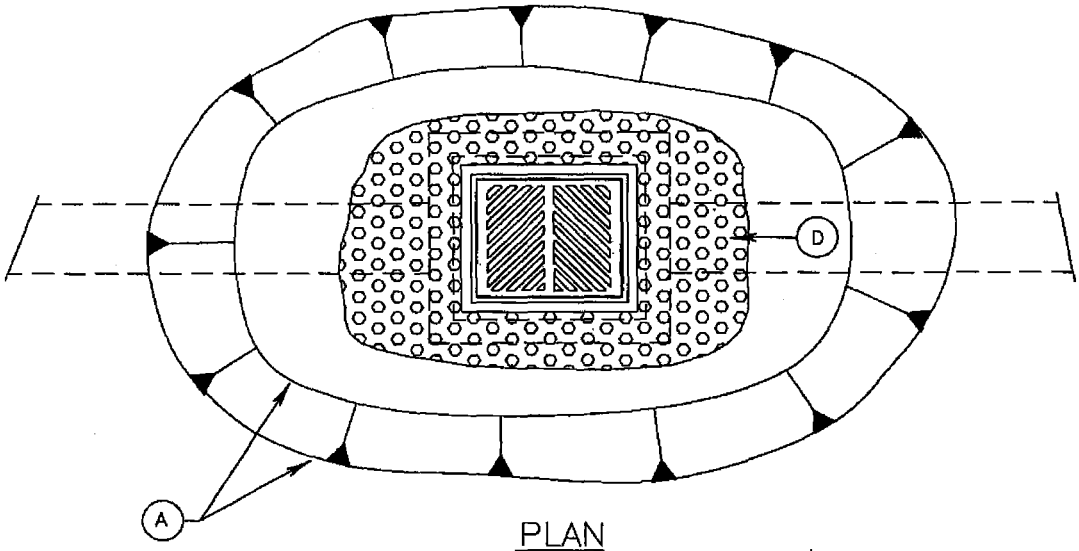

PLAN

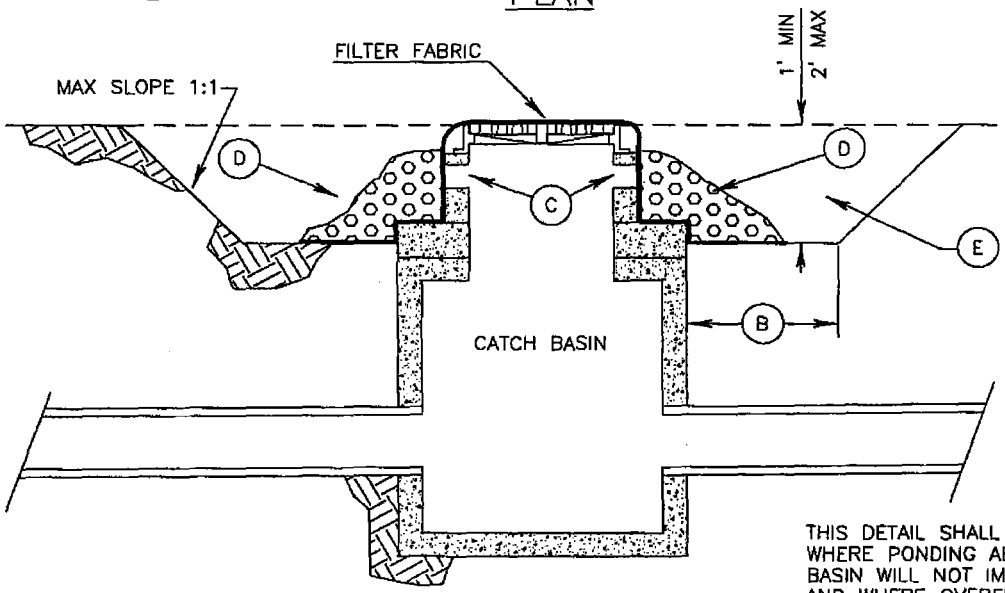

SECTION

THIS DETAIL SHALL ONLY BE USED WHERE PONDING ABOVE THE CATCH BASIN WILL NOT IMPACT ROADWAYS, AND WHERE OVERFLOW WILL NOT RESULT IN EROSION OF SLOPES.

(A) SHAPE OF SEDIMENTATION POND MAY VARY TO FIT DRAINAGE AREA AND TERRAIN. MODIFY AS NECESSARY TO ENSURE SATISFACTORY TRAPPING OF SEDIMENT.HALF-CIRCLE POND MAY BE USED WHEN CURB AND GUTTER ARE INSTALLED DURING STREET CONSTRUCTION.

(B) USE THE K.C.S.W.D.M. TO DETERMINE THE TRAP GEOMETRY-SEE SEC. 5.4.5.1 – 5' MIN.

(C) TEMPORARILY LEAVE OUT BLOCK. COVER OPENING AND GRATE WITH FILTER FABRIC.

(D) HOLD FILTER FABRIC IN PLACE WITH 3/4" TO 1 1/2" GRAVEL.

(E) CONTRACTOR SHALL RESTORE THE TRAP BACK TO ORIGINAL DEPTH AND SIZE WHEN THE SEDIMENT REACHES 1'.

N.T.S.

City of Woodinville DEPARTMENT OF PUBLIC WORKS	STORM. DRAIN INLET PROTECTION SEDIMENTATION TRAP	406A revision date NOV, 98

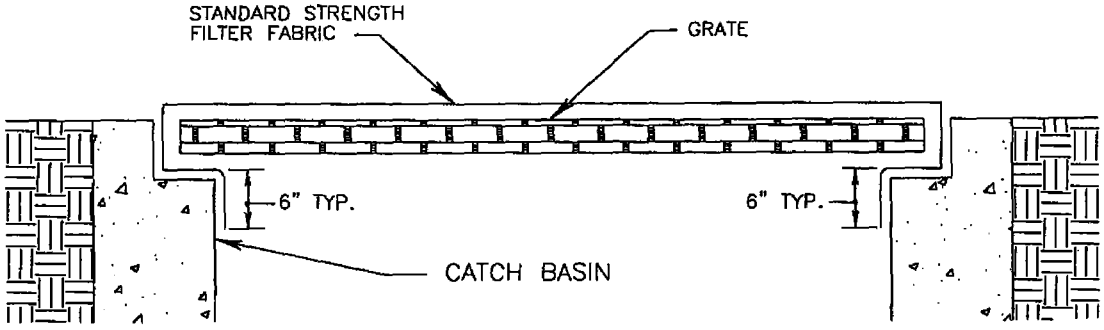

NOTE: ONLY TO BE USED WHERE PONDING OF WATER ABOVE THE CATCH BASIN WILL NOT IMPACT ROADWAYS AND WHERE OVERFLOW WILL NOT RESULT IN EROSION OF SLOPES.

FILTER FABRIC PROTECTION

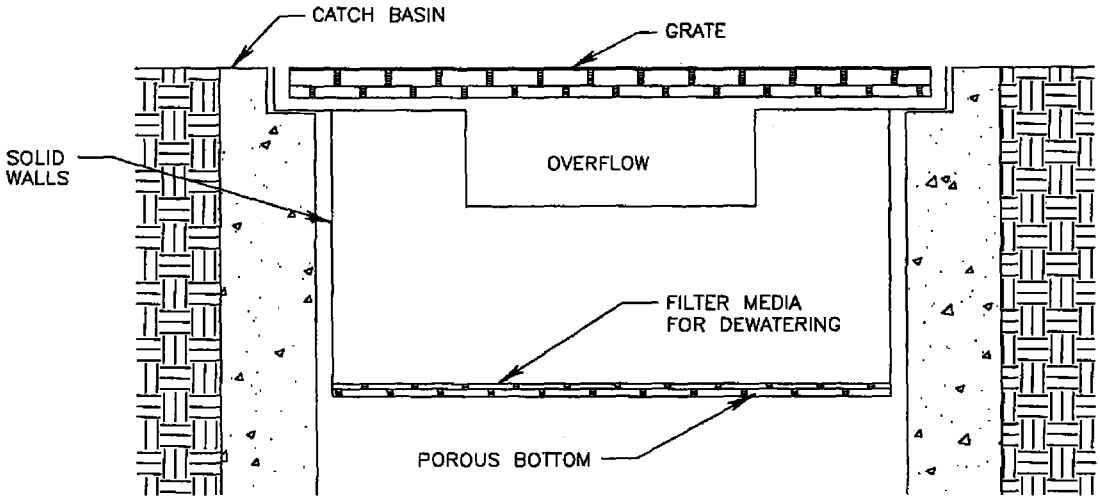

NOTE: THIS DETAIL IS ONLY SCHEMATIC. INSERTS SHALL HAVE A MIN. 0.5 C.F. OF STORAGE, THE MEANS TO DEWATER THE STORED SEDIMENT, AND AN OVERFLOW.

CATCH BASIN INSERT

NOTES:

1 ANY ACCUMULATED SEDIMENT ON OR AROUND THE FILTER FABRIC PROTECTION SHALL BE REMOVED IMMEDIATELY. SEDIMENT SHALL NOT BE REMOVED WITH WATER, AND ALL SEDIMENT MUST BE DISPOSED OF AS FILL ON-SITE OR HAULED OFF-SITE.

2 ANY SEDIMENT IN THE CATCH BASIN INSERT SHALL BE REMOVED WHEN THE SEDIMENT HAS FILLED ONE-THIRD OF THE AVAILABLE STORAGE. THE FILTER MEDIA FOR THE INSERT SHALL BE CLEANED OR REPLACED AT LEAST MONTHLY.

3 REGULAR MAINTENANCE IS CRITICAL FOR BOTH FORMS OF CATCH BASIN PROTECTION. UNLIKE MANY FORMS OF PROTECTION THAT FAIL GRADUALLY, CATCH BASIN PROTECTION WILL FAIL SUDDENLY AND COMPLETELY IF NOT MAINTAINED PROPERLY.

N.T.S.

City of Woodinville DEPARTMENT OF PUBLIC WORKS	STORM INLET PROTECTION	406B revision date NOV, 98

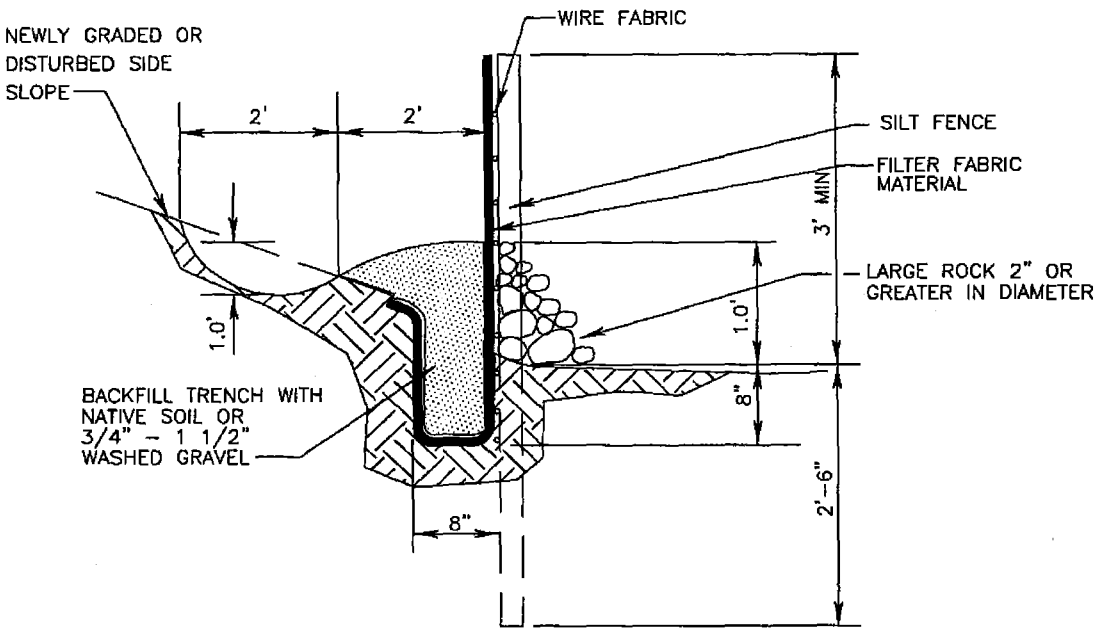

SECTION A-A

NOTE:

1 THE SILT FENCE SHALL BE INSTALLED FIRST. AFTER THE SILT FENCE HAS BEEN INSTALLED, CONSTRUCT BERM AND TRENCH.

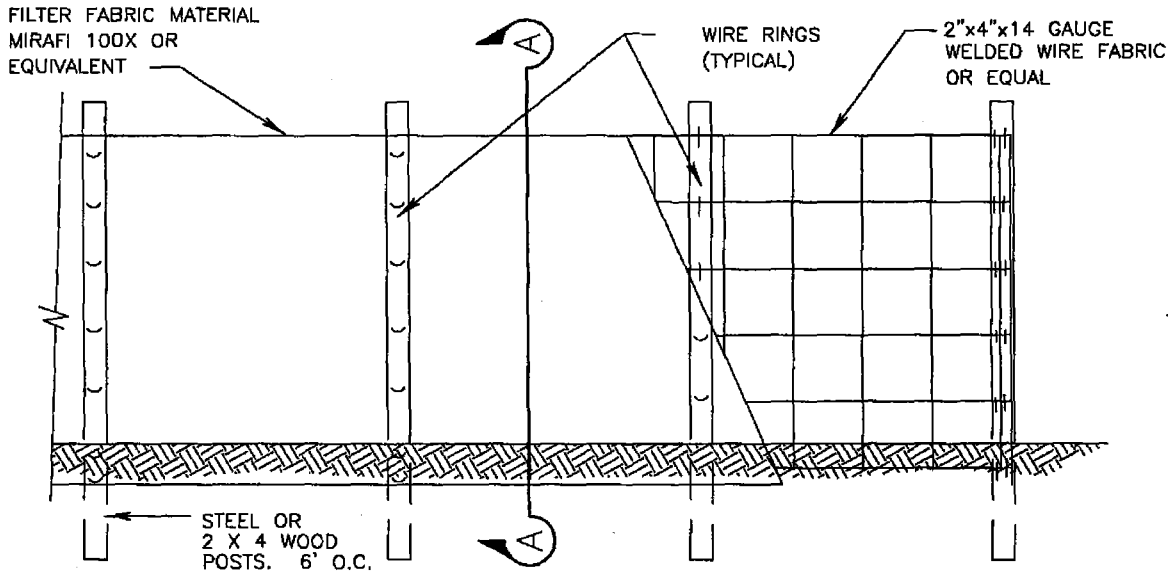

ELEVATION

N.T.S.

City of Woodinville DEPARTMENT OF PUBLIC WORKS	SILT FENCE	407A revision date NOV, 98

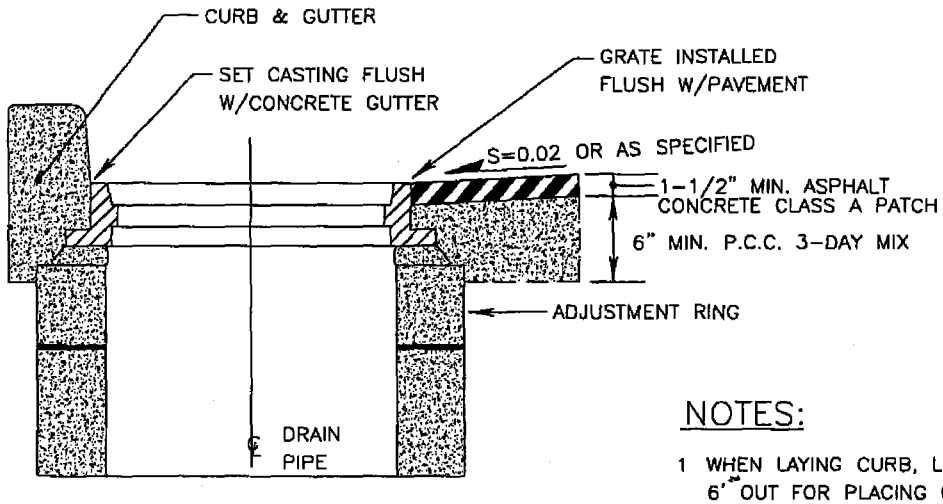

SECTION A–A

NOTES:

1. WHEN LAYING CURB, LEAVE 6' OUT FOR PLACING C.B., FRAME AND GRATE.
2. PLACE CURB AROUND C.B. USING CEMENT CONCRETE 3–DAY MIX.
3. AN APPROVED MATERIAL WHICH WILL PREVENT BONDING OF THE CURB TO FRAME, GRATE OR CATCH BASIN SHALL BE USED.
4. SEE WSDOT STANDARD PLANS FOR CATCH BASIN CONSTRUCTION AND DETAILS.

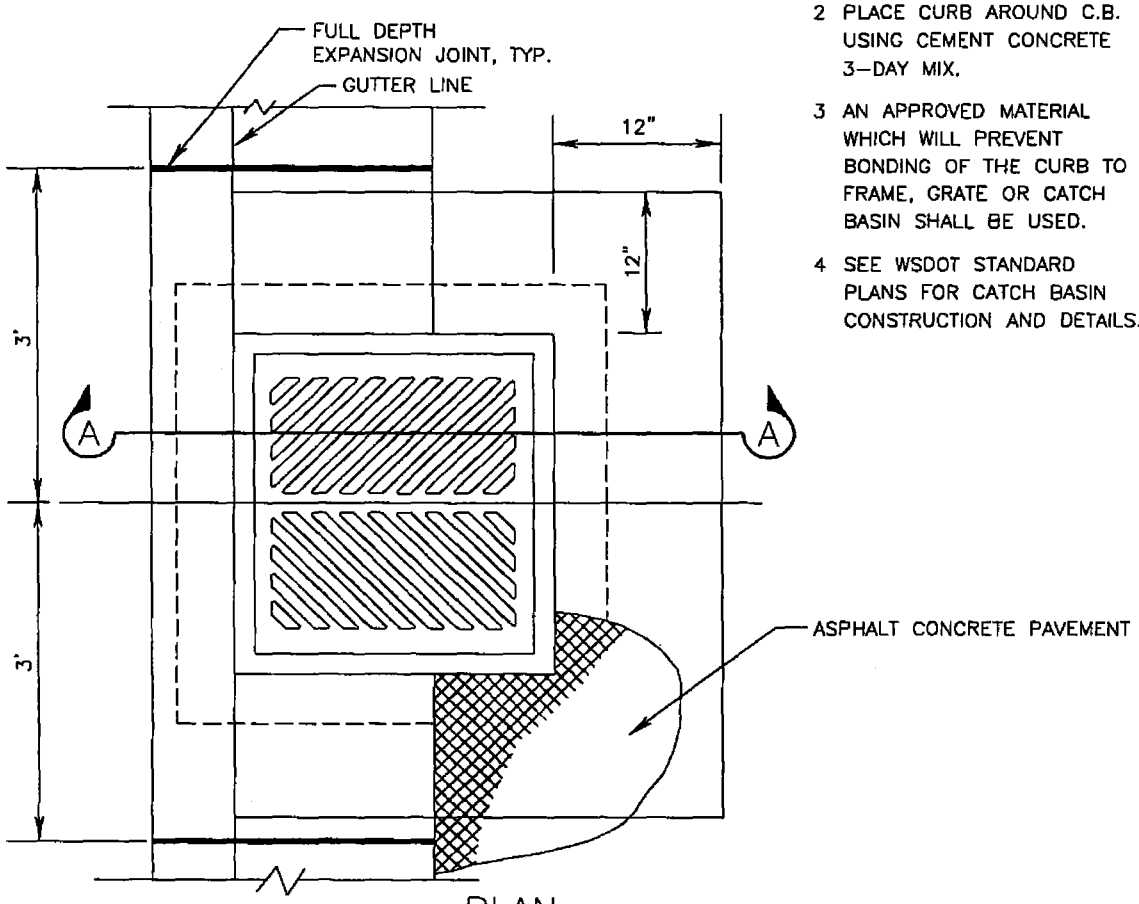

PLAN

City of Woodinville DEPARTMENT OF PUBLIC WORKS	CATCH BASIN INSTALLATION	420 revision date NOV. 98

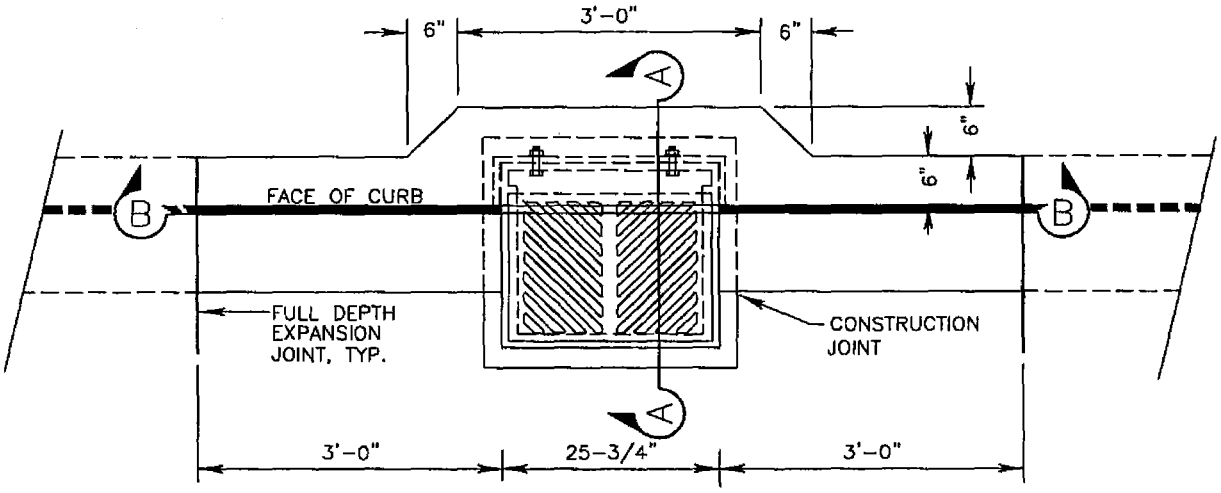

TOP VIEW

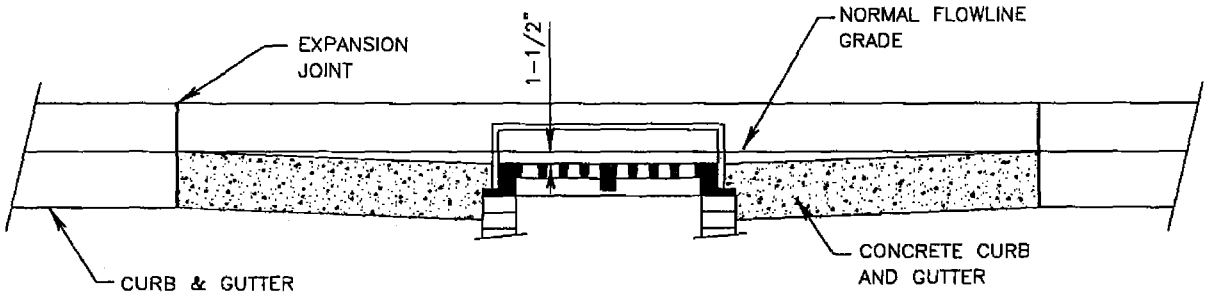

SECTION B-B

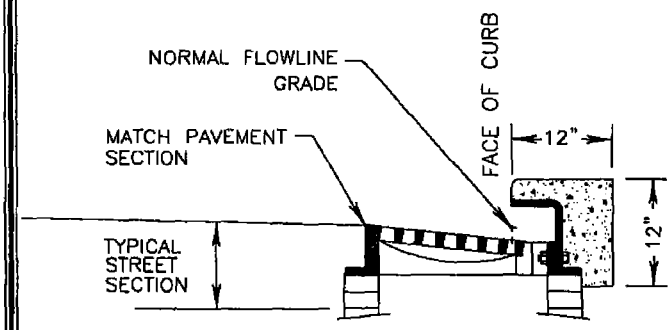

SECTION A-A

NOTES:

1 THROUGH CURB INLETS SHALL BE INSTALLED AT ALL SAG LOCATIONS.

2 ALL THROUGH CURB INLETS SHALL BE EQUIPPED WITH FLOATABLE MATERIAL SEPARATORS.

N.T.S.

City of Woodinville DEPARTMENT OF PUBLIC WORKS	THROUGH CURB INLET INSTALLATION	421 revision date NOV, 98

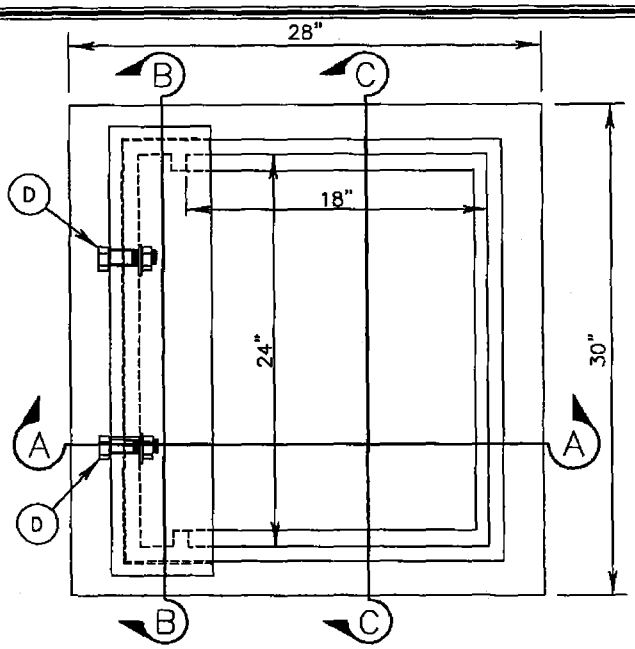

PLAN
GRATE REMOVED

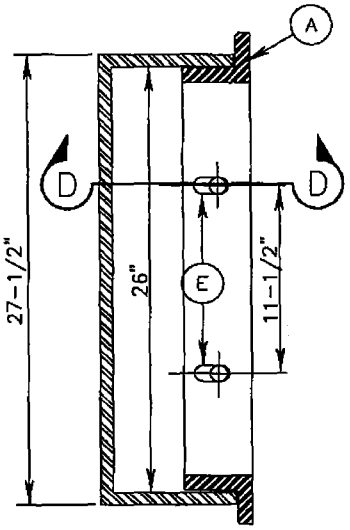

SECTION B-B

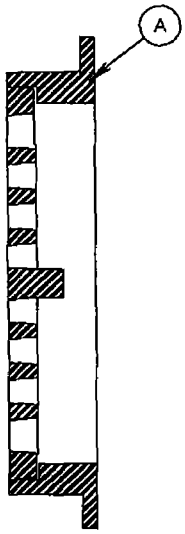

SECTION C-C

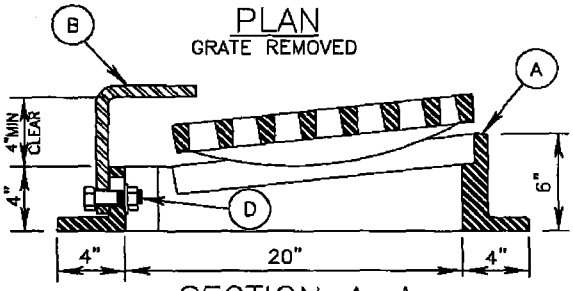

SECTION A-A
GRATE RAISED

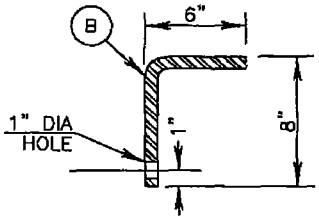

SECTION D-D

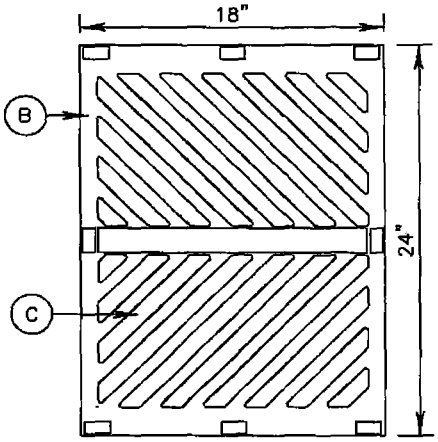

GRATE TOP VIEW

(A) FRAME MATERIAL SHALL BE CAST IRON ASTM A48, CLASS 30, WITH BITUMINOUS COATING.

(B) GRATE AND COVER MATERIAL SHALL BE DUCTILE IRON ASTM A536, GRADE 80-55-06 WITH BITUMINOUS COATING.

(C) GRATE TO BE FABRICATED PER WSDOT STANDARD DETAIL B-2a WITH OVERALL DIMENSIONS OF 24"x18".

(D) PROVIDE 3/4" BOLT, NUT AND WASHERS.

(E) ADJUSTMENT SLOT IN FRAME CASTING APPROXIMATELY 1"x2". VERTICAL PLACEMENT TO PROVIDE MIN CLEARANCE BETWEEN GRATE AND COVER PLATE.

N.T.S.

City of Woodinville DEPARTMENT OF PUBLIC WORKS	THROUGH CURB INLET FRAME & GRATE	425 revision date NOV, 98

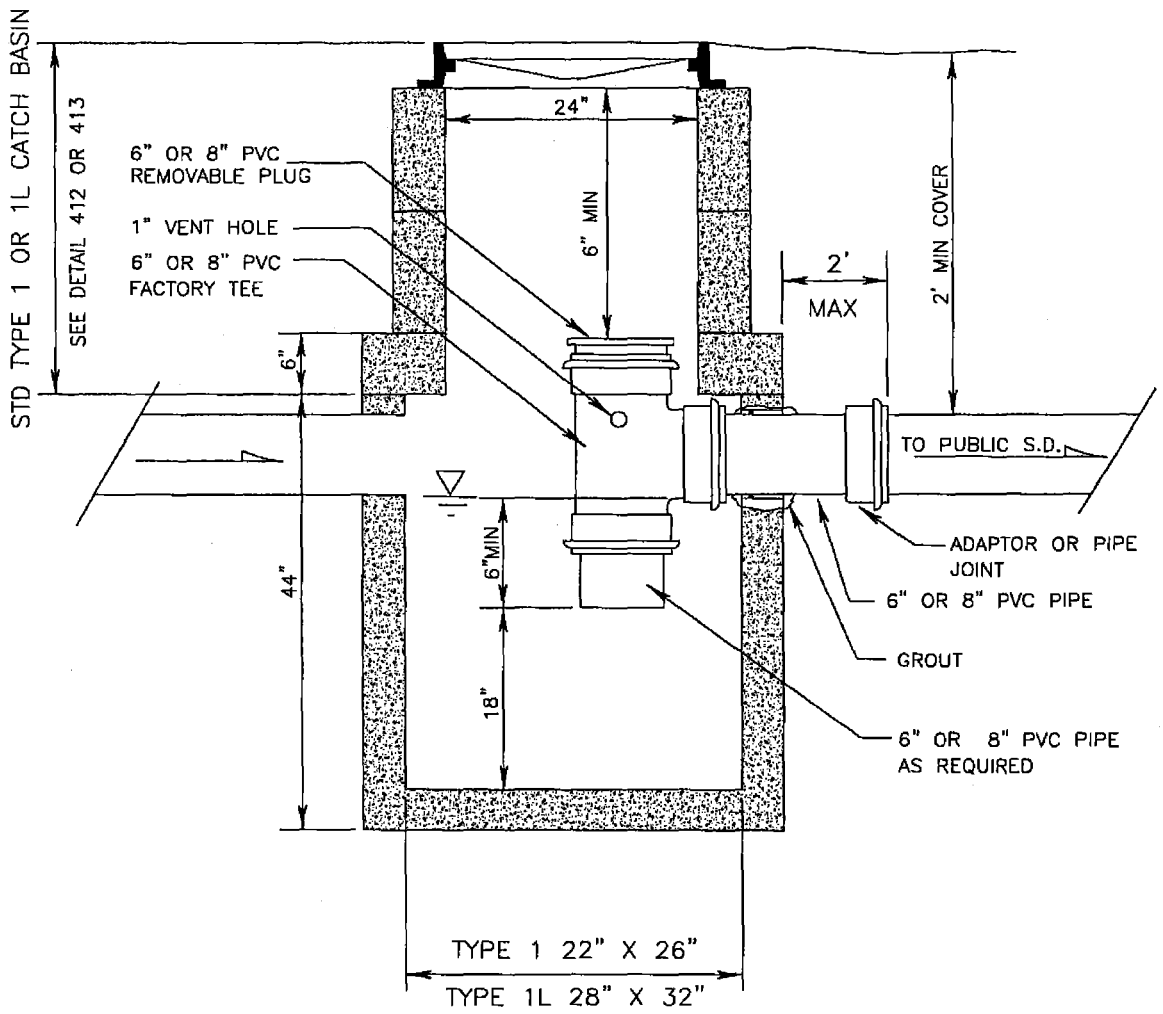

* SEE WSDOT STANDARD PLANS FOR TYPE 1 AND TYPE 1L CATCH BASINS.

N.T.S.

City of Woodinville DEPARTMENT OF PUBLIC WORKS	FLOATABLE MATERIAL SEPARATOR–6" OR 8" PIPE	430 revision date NOV, 98

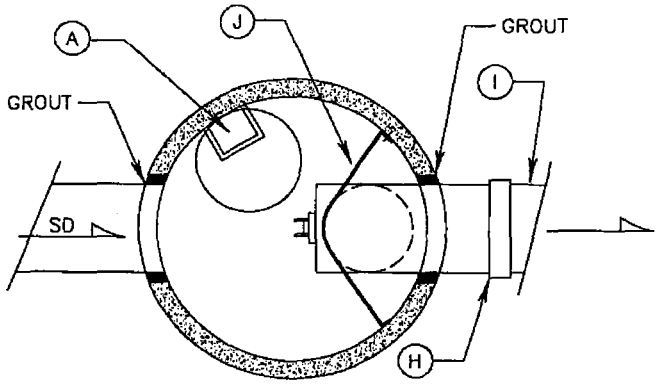

PLAN

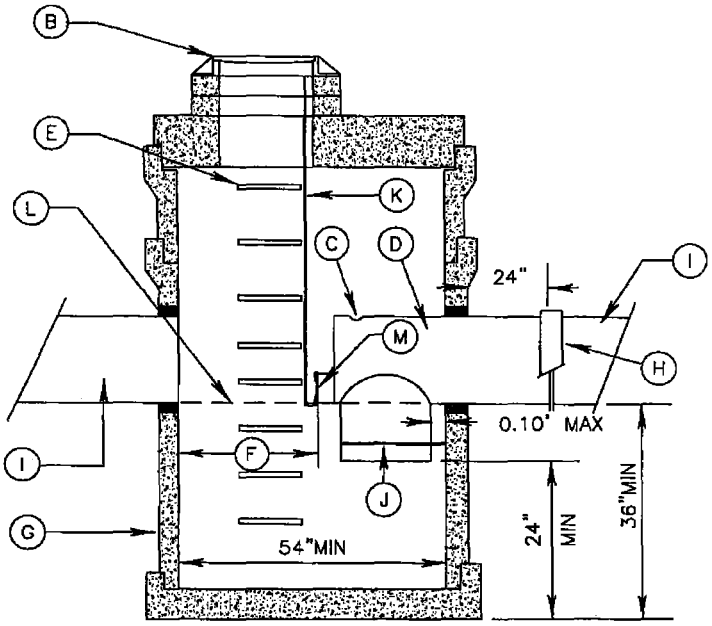

ELEVATION

(A) INSTALL MANHOLE ACCESS SO THAT LIFT GATE IS VISIBLE THROUGH OPENING AND STEPS CLEAR INLET AND RESTRICTOR UNIT.

(B) INSTALL MANHOLE RING AND COVER (WSDOT STD. B-25) OR FRAME AND GRATE (WSDOT STDS. B-2a OR B-26)

(C) 1" VENT HOLE.

(D) SEPARATOR ASSEMBLY.

(E) STEPS

(F) MIN CLEARANCE:
36" FOR OUTLETS OF 24" AND LARGER
18" FOR OUTLETS OF 18" AND SMALLER

(G) TYPE 2 CB 54" OR LARGER.

(H) BAND STRAP WITH GASKET

(I) SEE PROJECT PLANS AND SPECIFICATIONS FOR SIZE AND TYPE OF PIPE ENTERING AND EXITING CB.

(J) SECURE SEPARATOR TO CB WITH 8 GA ALUMINUM STRAP. BOLT TO CB WALL WITH STAINLESS STEEL ANCHOR BOLTS AND TACK WELD TO SEPARATOR UNIT.

(K) LIFT HANDLE SEE STD DETAIL 444.

(L) INVERT ELEVATION: SEE PLANS

(M) CLEAN OUT, 8" MIN. DIA. FOR LESS THAN 24' DIA. OUTLET PIPE. 12" FOR 24" DIA. AND LARGER OUTLET PIPE.

City of Woodinville DEPARTMENT OF PUBLIC WORKS	FLOATABLE MATERIAL SEPARATOR-12" AND LARGER PIPE	431 revision date NOV, 98

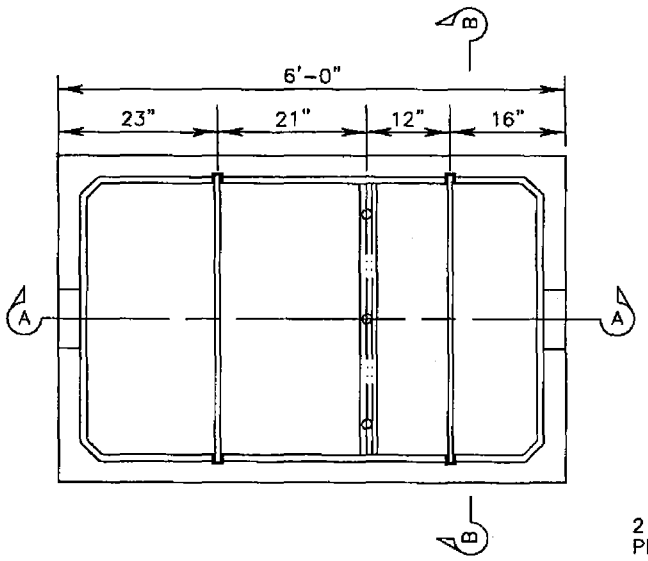

PLAN–BASE

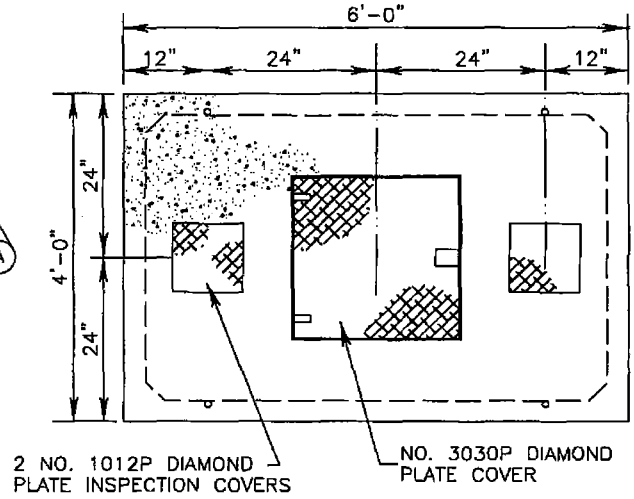

PLAN–COVER

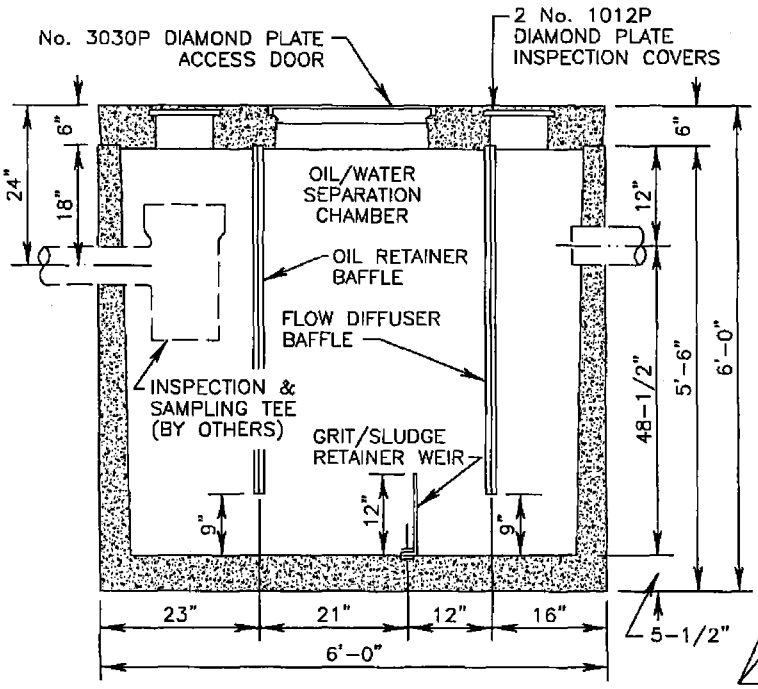

SECTION A–A

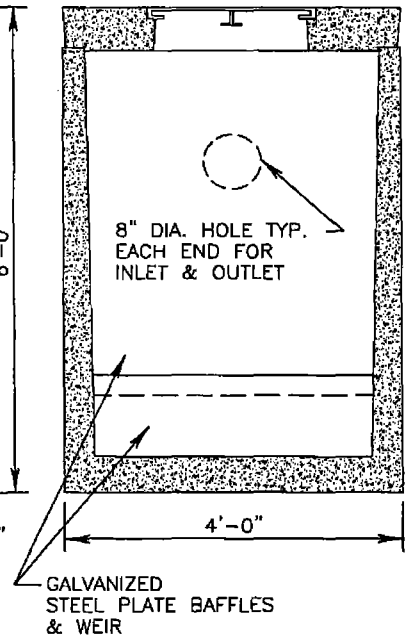

SECTION B–B

N.T.S.

City of Woodinville DEPARTMENT OF PUBLIC WORKS	OIL WATER SEPARATOR–API	435 revision date NOV. 98

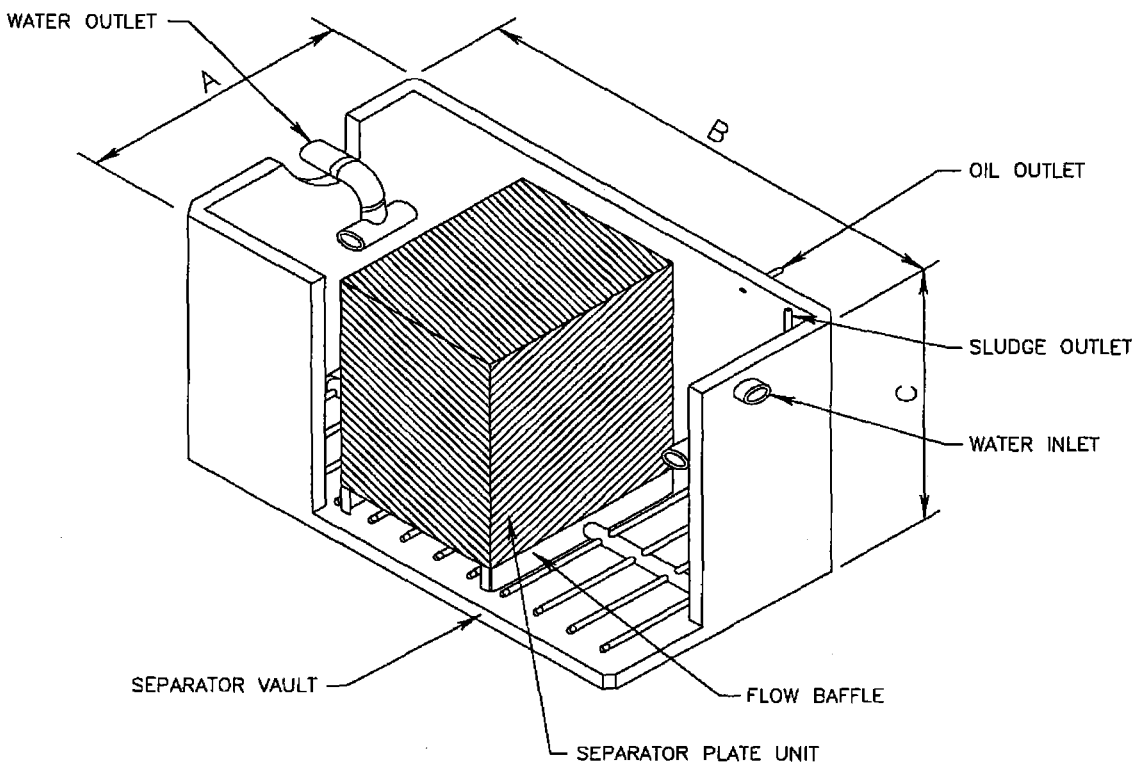

Sq. Ft. of Effective Sepaeation Area	Capacity at 0.25 Gpm/ Sq.Ft.	Capacity at 0.50 Gpm/ Sq.Ft.	A	B	C	Inlet Size	Outlet Size	Oil Outlet Size	Sludge Outlet Size
33	8 GPM	16 GPM	27"	62"	30"	4"	4"	2"	2"
200	50 GPM	100 GPM	48"	72"	66"	4"	4"	2"	2"
300	75 GPM	150 GPM	56"	84"	72"	6"	6"	2"	2"
600	150 GPM	300 GPM	56"	84"	72"	8"	8"	3"	3"
1200	300 GPM	600 GPM	82"	154"	89"	10"	10"	3"	3"
2400	600 GPM	1200 GPM	92"	152"	98"	12"	12"	3"	3"
3200	800 GPM	1600 GPM	115"	187"	128"	15"	15"	4"	4"
4600	1150 GPM	2300 GPM	138"	186"	129"	15"	15"	4"	4"

NOTES:

1 Above capacities are based on 55° angle of inclination.

2 Larger capacities available may be used, but must be submitted to the Public Works Director for approval.

3 See Figure 4.6.5.a of the 1995 K.C.W.D.M. for design details.

N.T.S.

City of Woodinville DEPARTMENT OF PUBLIC WORKS	OIL WATER SEPARATOR COALESCING PLATE–SAMPLE	436 revision date NOV, 98

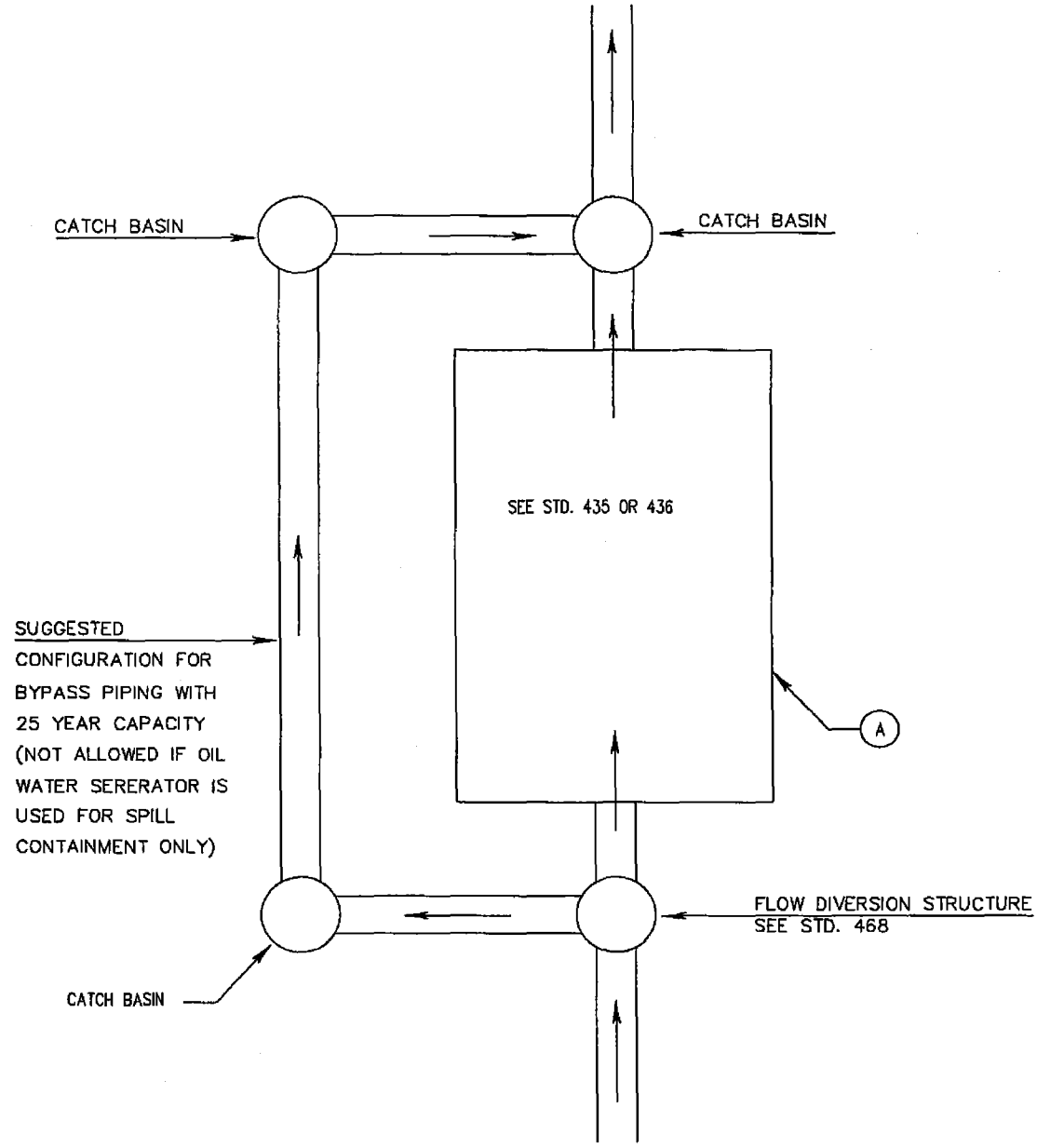

PLAN VIEW

(A) 6 MONTH DESIGN STORM. 24 HOUR DESIGN STORM EVENT.

N.T.S.

City of Woodinville DEPARTMENT OF PUBLIC WORKS	OIL WATER SEPARATOR LAYOUT	437 revision date NOV. 98

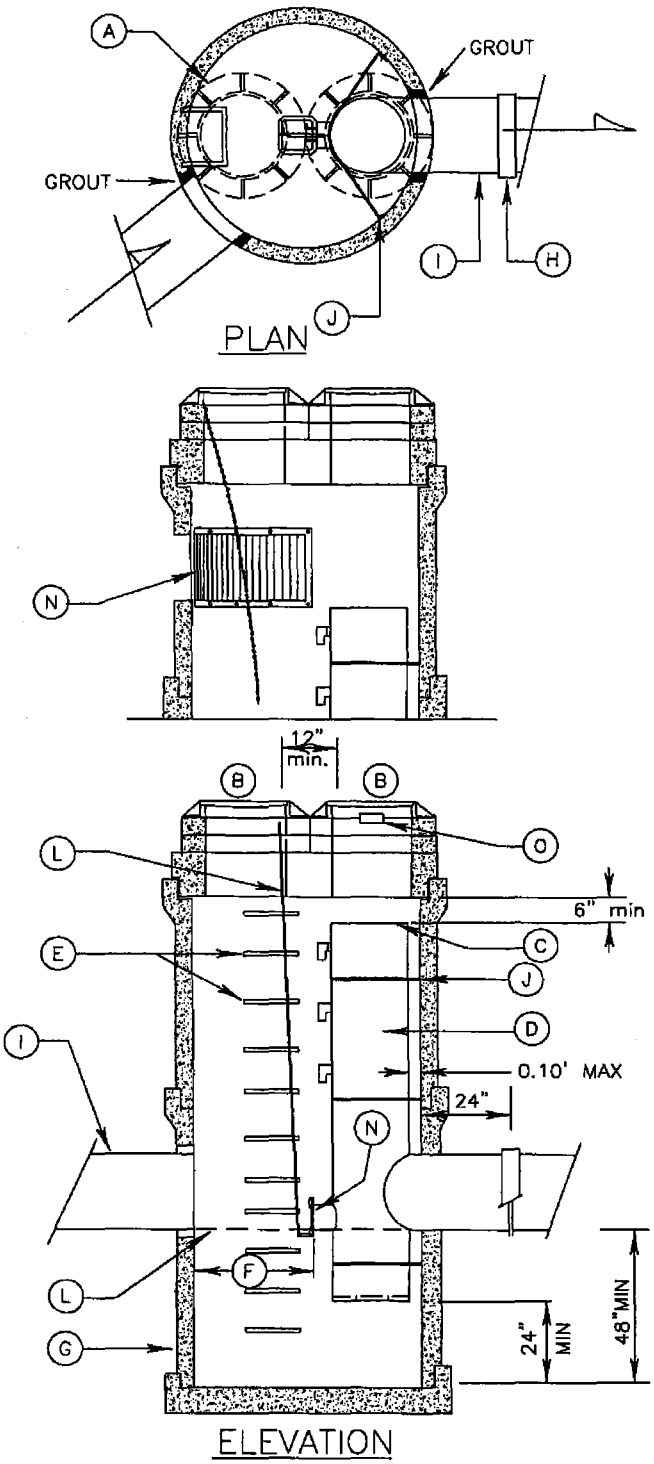

(A) INSTALL 2-24" DIA. MANHOLES ACCESS PER STD. 426, ONE SO THAT THE LIFT GATE IS VISIBLE AND THE STEPS ARE CLEAR AND DIRECTLY ACCESSABLE. THE OTHER IS OVER THE RESTRICTOR UNIT.

(B) IF ONE IS TO BE USED AS A CB USE STD. 422.

(C) OVERFLOW ELEVATION - SEE PLANS.

(D) RESTRICTOR UNIT - SEE STD. 441.

(E) STEPS.

(F) MIN CLEARANCE:
36"FOR OUTLETS OF 24" AND LARGER
18" FOR OUTLETS OF 18" AND SMALLER

(G) 72" TYPE 2 CB OR LARGER.

(H) BAND STRAP WITH GASKET.

(I) SEE PLAN AND SPECIFICATIONS FOR SIZE AND TYPE OF PIPE ENTERING AND EXITING CB.

(J) SECURE RESTRICTOR TO CB WITH 8 GA ALUMINUM STRAPS BOLT TO CB WALL WITH STAINLESS STEEL ANCHOR BOLTS. ONE STRAP ABOVE AND BELOW OUTLET REQUIRED, INTERMEDIATE STRAPS REQUIRED FOR RESTRICTOR RISERS GREATER THAN 12' ABOVE OUTLET.

(K) LIFT HANDLE - SEE STD. 444.

(L) INVERT ELEVATION: SEE PLANS AND SPECIFICATIONS.

(M) LIFT GATE OR SHEAR GATE - SEE STD. 443 OR 444.

(N) FOR POND APPLICATIONS EXPAND THE STRUCTURE HIGHER AND PROVIDE A FRAMED OVERFLOW DEBRIS GRATED OPENING ABOVE THE RESTRICTOR UNIT.

(O) I.D. PLATE PER K.C.S.W.D.M. CORE REG. #1.2.6-1.

N.T.S.

City of Woodinville DEPARTMENT OF PUBLIC WORKS	CONTROL STRUCTURE 72" DIA. OR LARGER	440 revision date NOV, 98

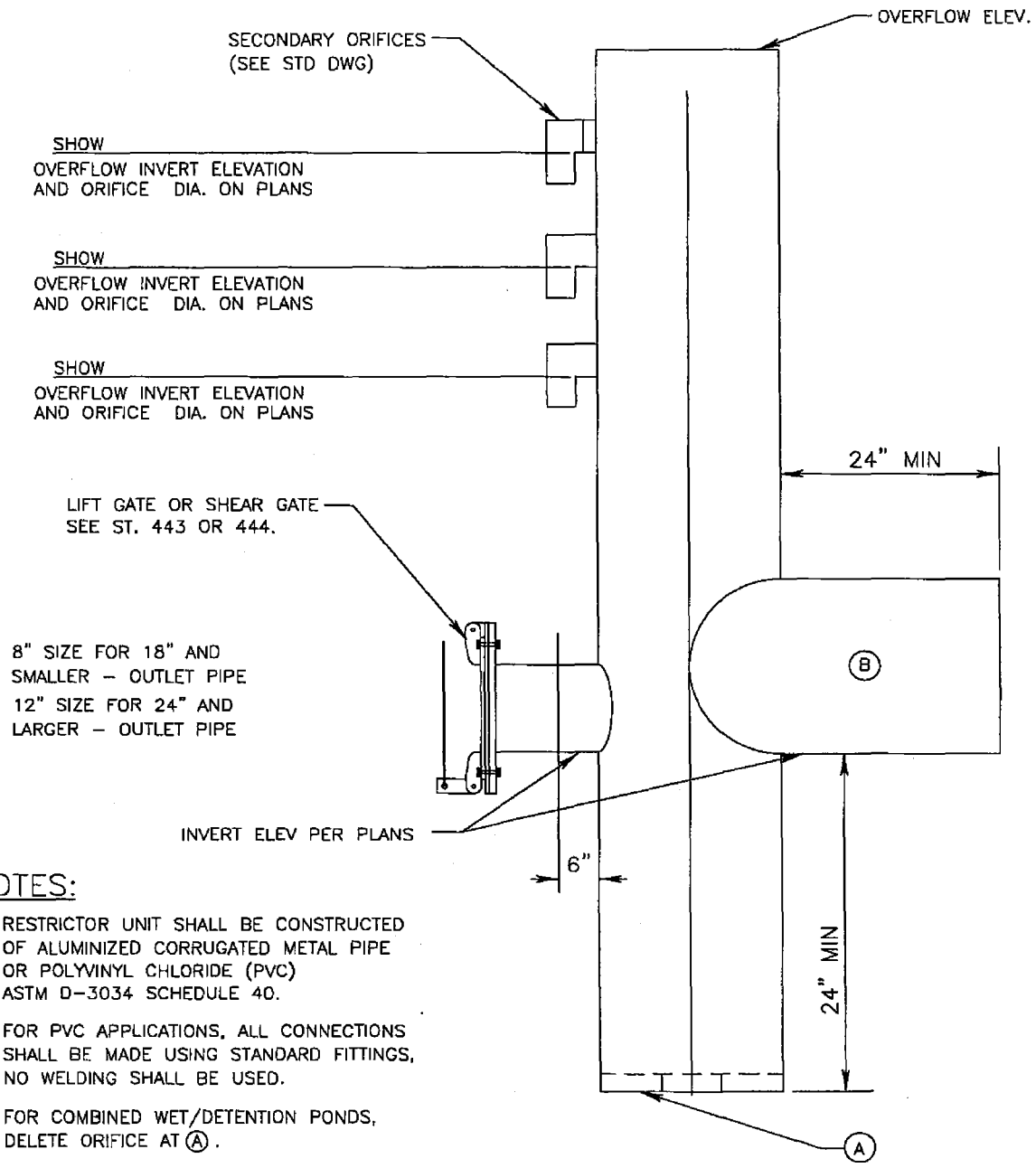

NOTES:

1. RESTRICTOR UNIT SHALL BE CONSTRUCTED OF ALUMINIZED CORRUGATED METAL PIPE OR POLYVINYL CHLORIDE (PVC) ASTM D-3034 SCHEDULE 40.
2. FOR PVC APPLICATIONS, ALL CONNECTIONS SHALL BE MADE USING STANDARD FITTINGS, NO WELDING SHALL BE USED.
3. FOR COMBINED WET/DETENTION PONDS, DELETE ORIFICE AT (A).

(A) 3/8" HDPE PLATE WELDED ALL AROUND – ORIFICE OPENING SIZE ACCORDING TO PLANS.

(B) OUTLET PIPE MAY BE ADS N12 SMOOTH HDPE OR TAPERED SMOOTH HDPE – TYPE, LENGTH AND SIZE AS SHOWN ON PLANS.

N.T.S.

City of Woodinville DEPARTMENT OF PUBLIC WORKS	RESTRICTOR RISER	441 revision date NOV, 98

NOTES:

1 LIFT GATE SHALL BE CONSTRUCTED OF: 1/4" R-6061-T6 ALUM. W/CLOSED CELL NEOPRENE PER ASTM 1056-67 CHEMICAL RESISTANT (OIL & GREASE), OZONE RESISTANT, 67° TO +250° F SERVICE TEMP.

2 ALL PARTS TO BE HDPE OR PVC EXCEPT AS NOTED.

(A) 1/2" THICK BOLT FLANGE TAPPED FOR 3 EA X 1/2" DIAMETER NYLON BOLTS-INCLUDE A NEOPRENE GASKET (ELEVATION PER PLANS).

(B) WELDED 90 DEG. BEND (SIZE PER PLANS) WITH 1/2" THICK BOLT FLANGE DRILLED FOR 1/2" DIAMETER NYLON BOLTS.

(C) N12 OR SMOOTH HDPE WITH 1/2" SS BOLTS FLANGE-HOLE PATTTERN TO MATCH GATE OR CONTRACTOR CAN DRILL IN FIELD.

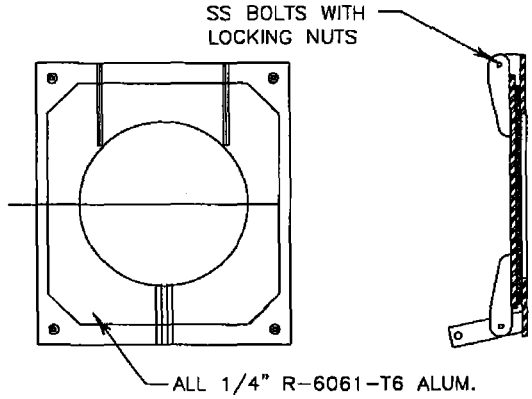

LIFT GATE DETAIL

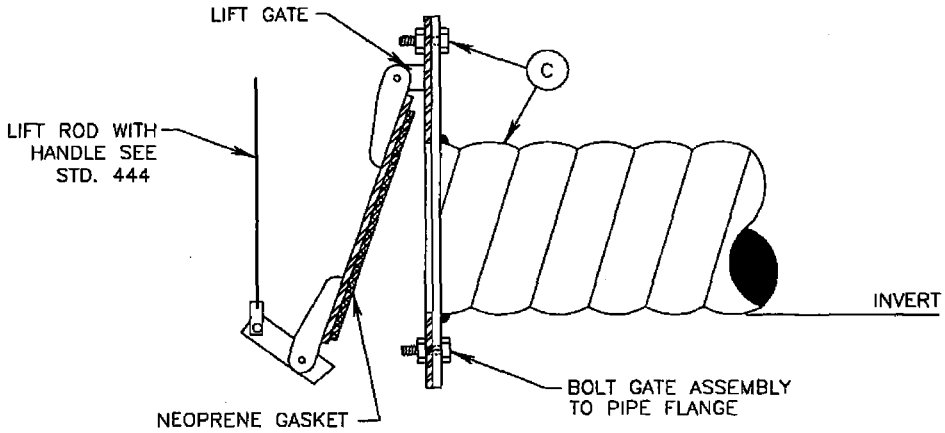

LIFT GATE ASSEMBLY

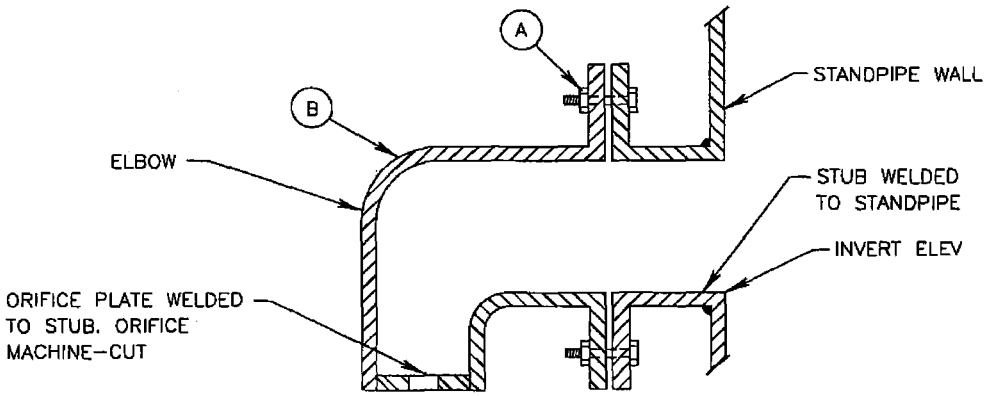

SECONDARY ORIFICE DETAIL

N.T.S.

City of Woodinville DEPARTMENT OF PUBLIC WORKS	FLAP GATE	443 revision date NOV. 98

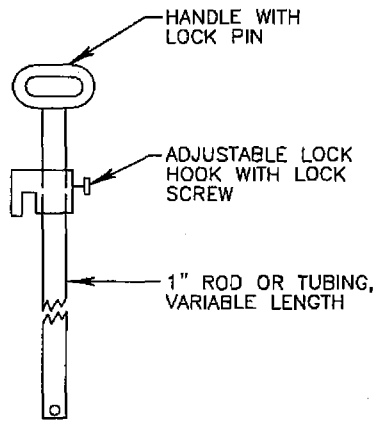

LIFT HANDLE

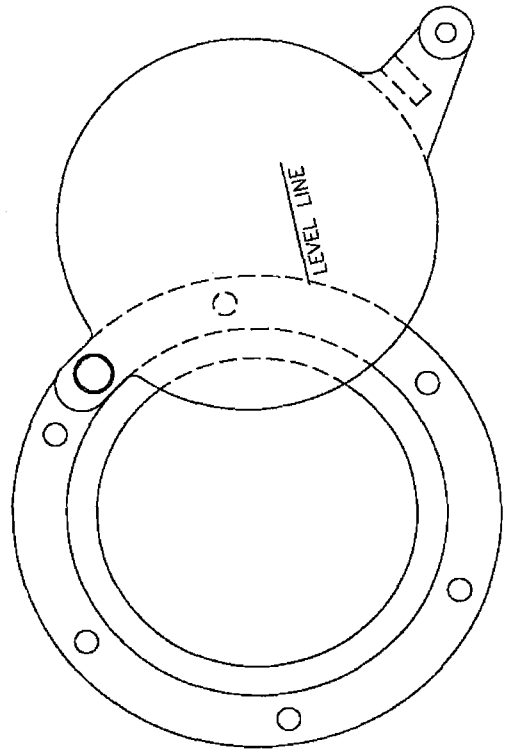

MAXIMUM OPENING OF GATE

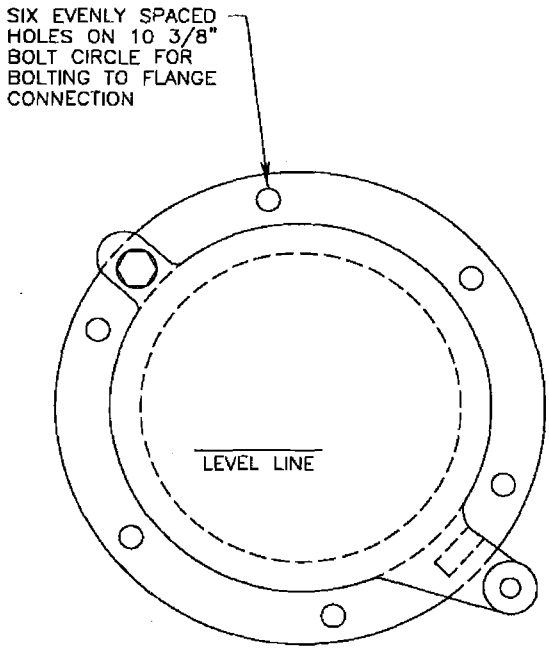

FRONT

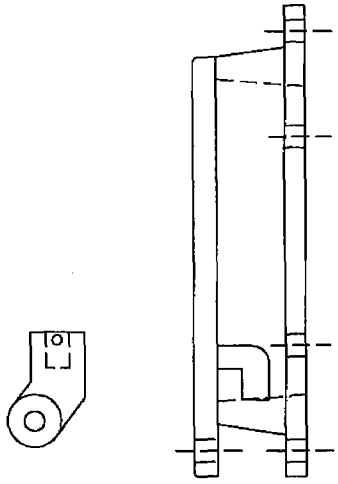

IDE

N.T.S.

City of Woodinville DEPARTMENT OF PUBLIC WORKS	SHEAR GATE & LIFT HANDLE	444 revision date NOV, 98

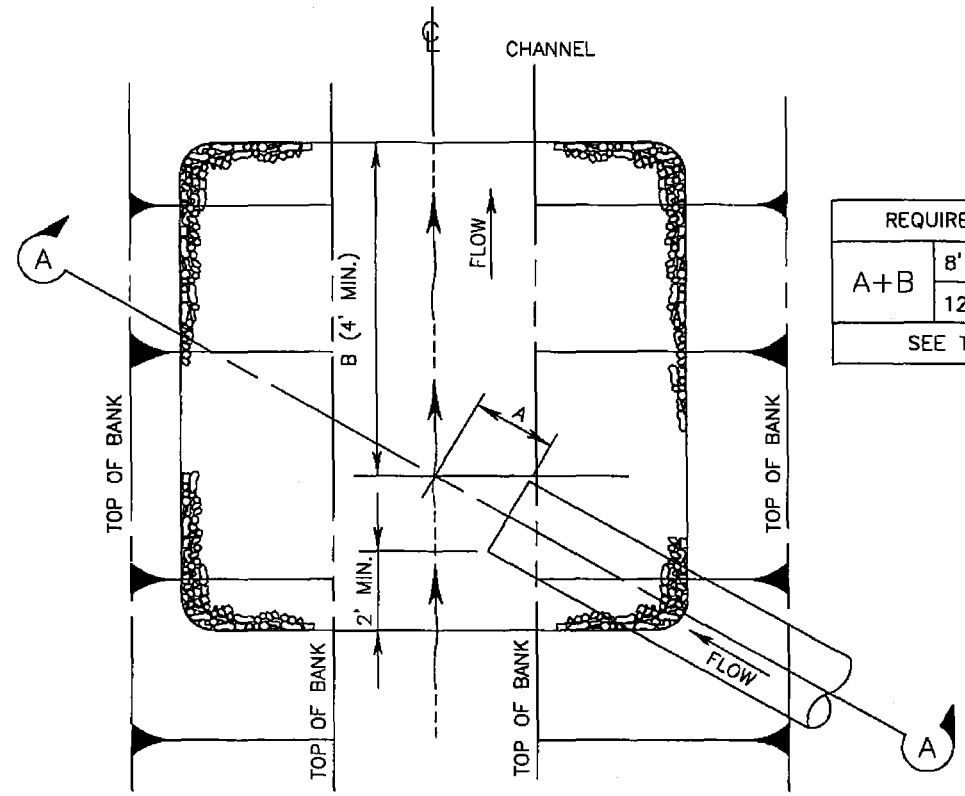

REQUIRED DIMENSIONS	
A+B	8' FOR ROCK LINING
	12' FOR RIP RAP
SEE TABLE 4.3.6A	

PLAN

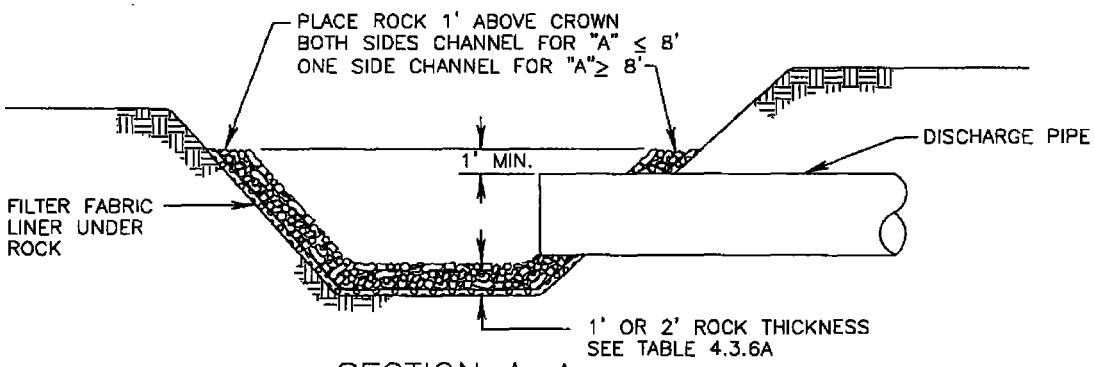

SECTION A–A

N.T.S.

City of Woodinville	PIPE OUTFALL QUARRY SPALLS	461
DEPARTMENT OF PUBLIC WORKS		revision date NOV, 98

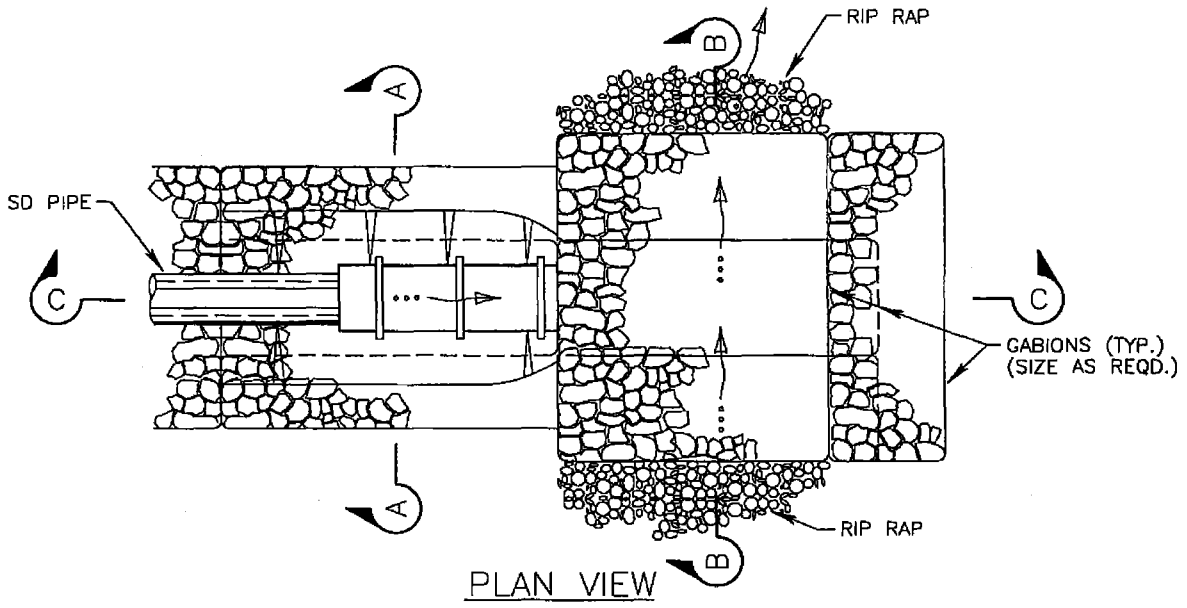

PLAN VIEW

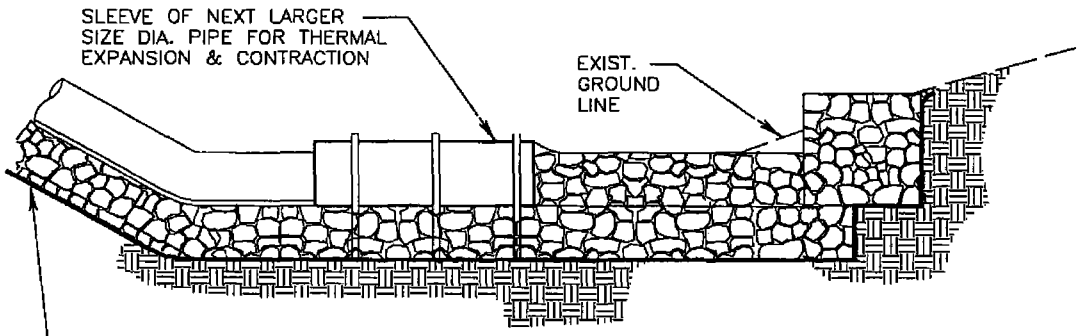

SECTION C–C

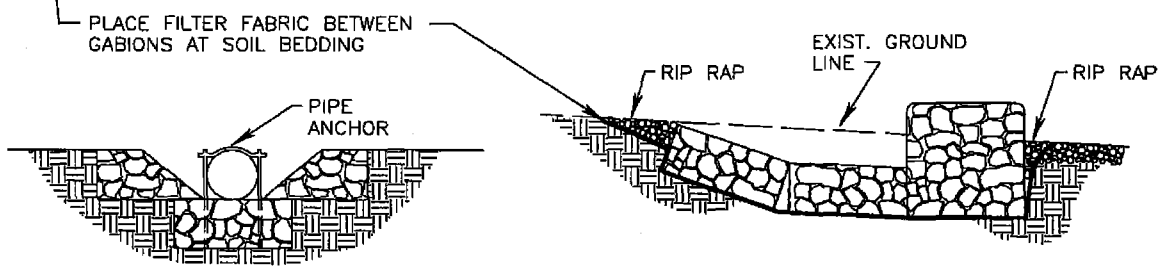

SECTION A–A

SECTION B–B

N.T.S.

City of Woodinville DEPARTMENT OF PUBLIC WORKS	PIPE OUTFALL GABION TYPE	462 revision date NOV. 98

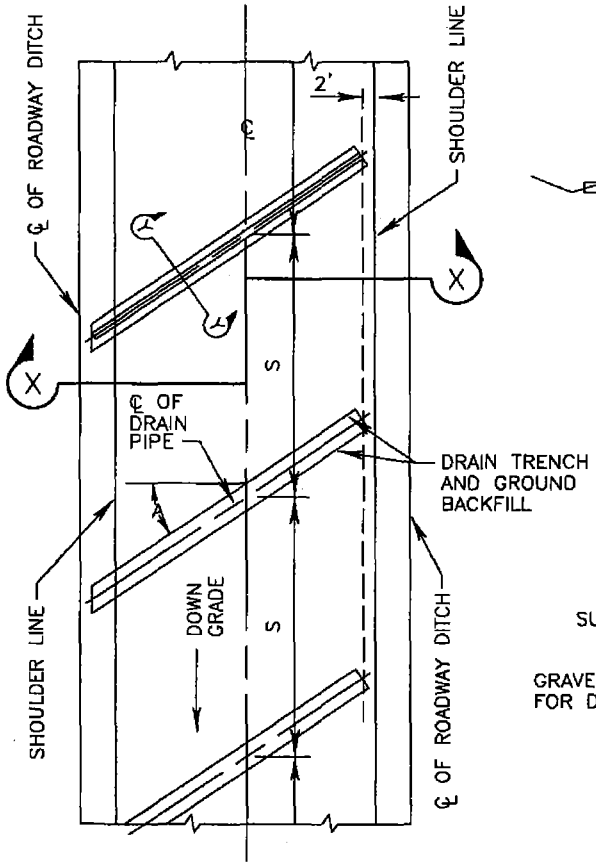

PLAN

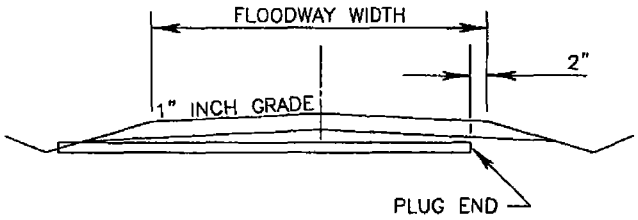

SECTION X–X

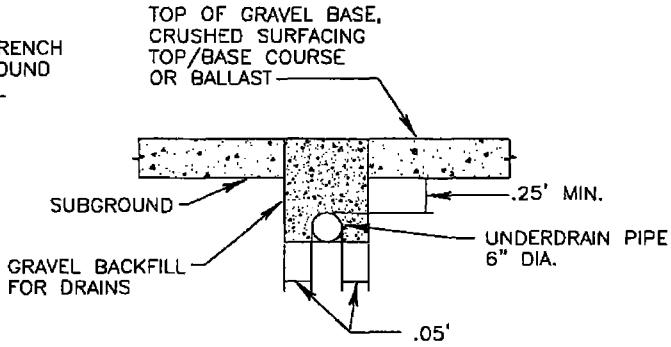

SECTION Y–Y

NOTES:

1 UNDERDRAINS OF THIS TYPE SHALL BE CONSTRUCTED AFTER THE GRAVEL BASE AND/OR BALLAST IS IN PLACE.

2 THE SPACING (S) SHALL BE AS REQUIRED FOR THE PARTICULAR PROJECT BUT NOT MORE THAN 500 FEET ON GRADES IN EXCESS OF 2.5%.

3 THE PATTERN MAY HAVE TO BE VARIED IN CASE OF A SPECIAL DESIGN FOR SPRINGS OR FREE WATER IN THE SUBGRADE.

4 THE ANGLE (A) SHALL VARY TO PROVIDE A MINIMUM QUADRANT ON THE DRAIN OF 0.5%.

5 DIRECTIONAL ROADWAYS OF MULTILANE HIGHWAYS SHALL BE DRAINED INDEPENDENTLY OF ONE ANOTHER. DRAINAGE FLOW, PREFERABLY, SHOULD BE AWAY FROM THE MEDIAN.

6 SECTION Y – Y INDICATES THE MINIMUM REQUIRED AREA OF EXCAVATION. THE CONTRACTOR MAY, UPON THE APPROVAL OF THE ENGINEER, EXCAVATE ADDITIONAL AREA IF REQUIRED FOR HIS CONVENIENCE; HOWEVER, NO ADDITIONAL PAYMENT WILL BE MADE OVER THAT PROVIDED FOR HEREIN.

7 THE PIPE SHALL BE A 6–INCH DIAMETER UNDERDRAIN PIPE.

N.T.S.

City of Woodinville DEPARTMENT OF PUBLIC WORKS	FRENCH DRAIN UNDER ROAD	464 revision date NOV, 98

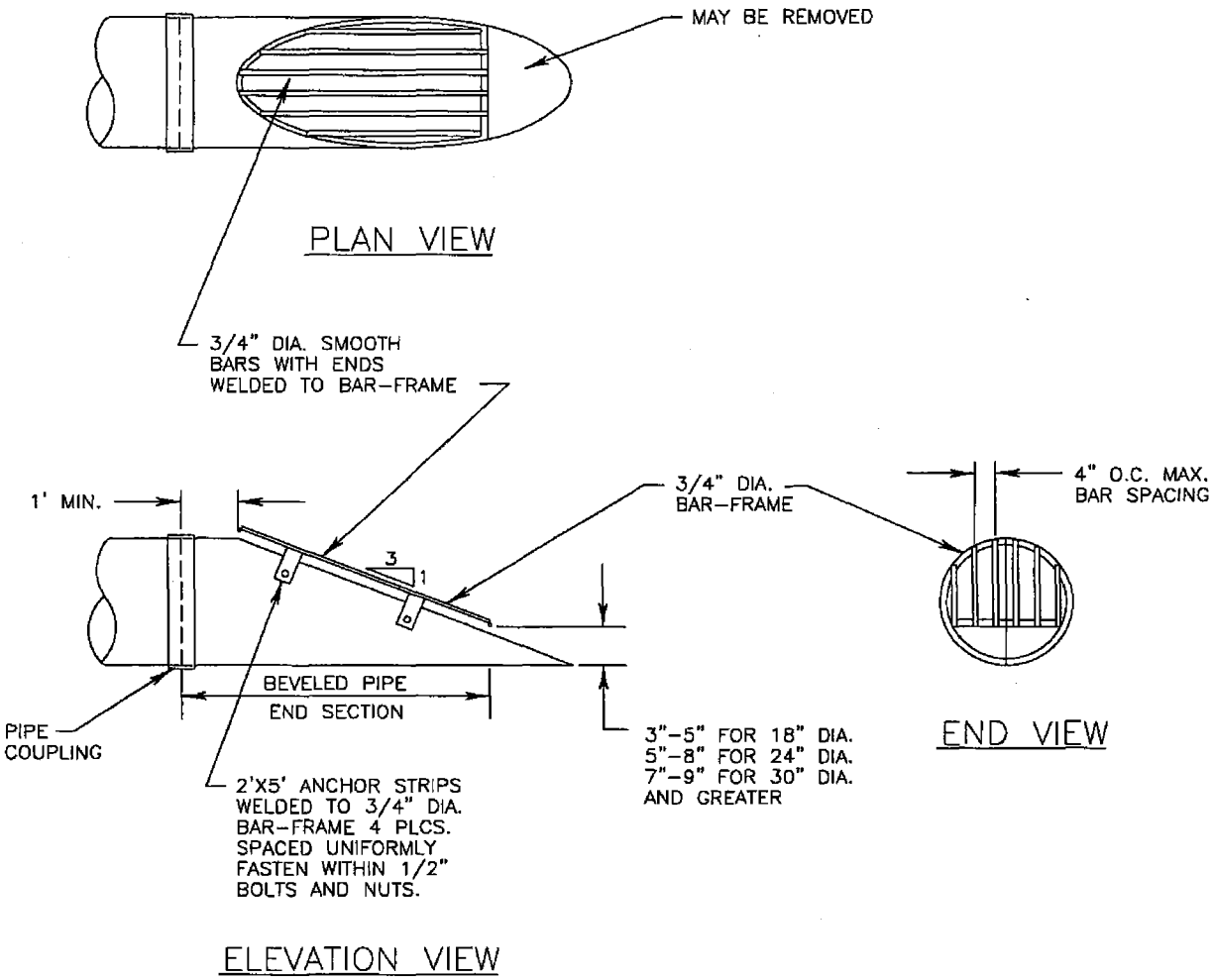

NOTES:

1 CMP END-SECTION SHOWN. FOR CONCRETE PIPE BEVELED END-SECTION, SEE KCRS DWG. No. 2-001.

2 ALL PARTS MUST BE ALUMINUM OR STAINLESS STEEL.

N.T.S.

City of Woodinville DEPARTMENT OF PUBLIC WORKS	PIPE END SECTION TRASH RACK	465 revision date NOV, 98

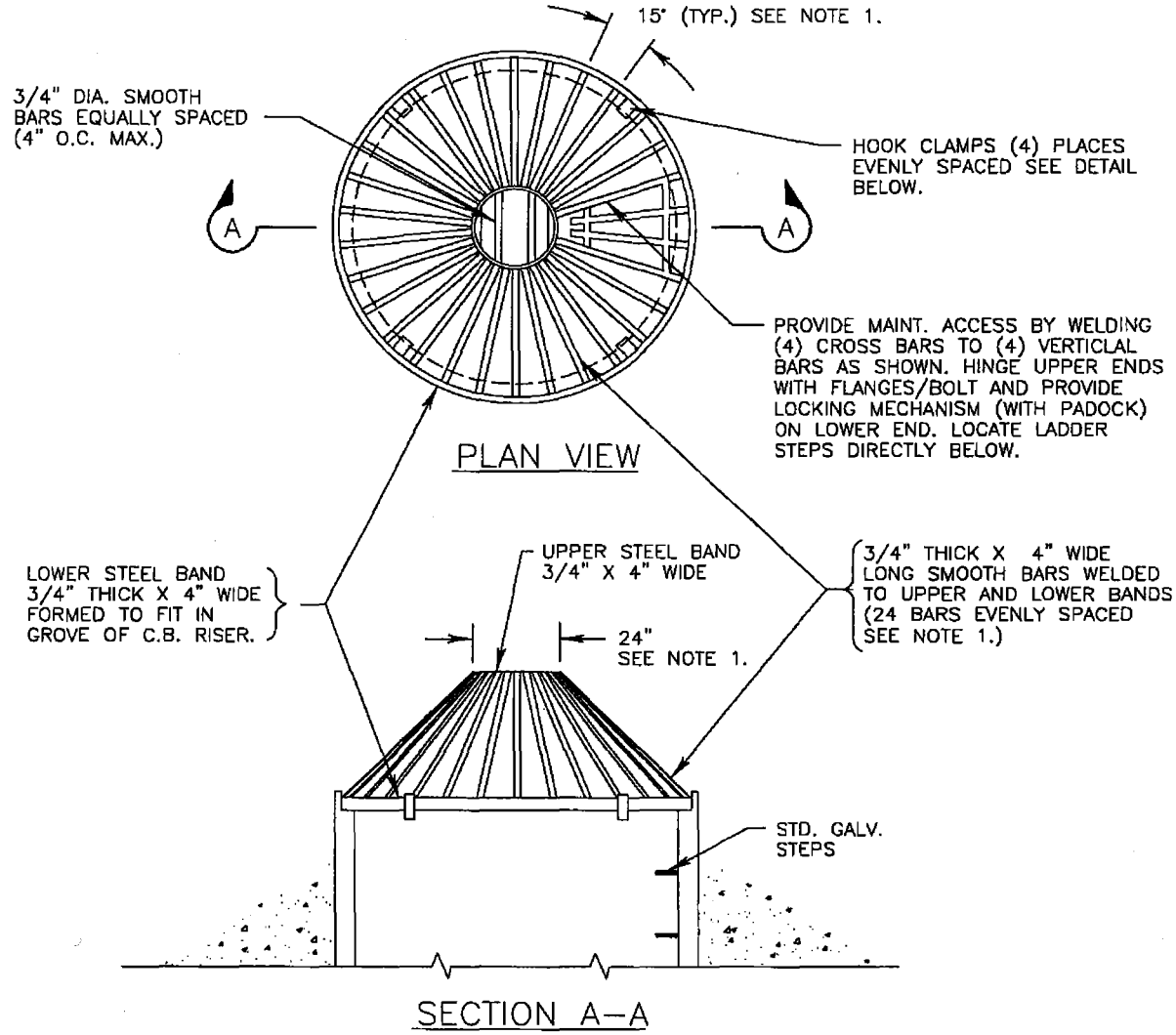

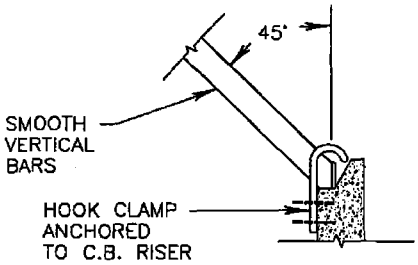

DETAIL HOOK CLAMP

NOTES:

1. DIMENSIONS ARE FOR INSTALLATION ON 54" DIA. L.B. FOR DIFFERENT DIA. L.B.'S ADJUST DIMENSIONS TO MAINTAIN 457 ANGLE ON "VERTICAL" BARS AND 7" O.C. MAX. SPACING OF BARS AROUND LOWER STEEL BAND.
2. METAL PARTS' CORROSION RESISTANT, STEEL PARTS GALVANIZED.
3. THIS DEBRIS BARRIER IS ALSO RECOMMENDED FOR USE ON THE INLET TO ROADWAY CROSS-CULVERTS WITH HIGH POTENTIAL FOR DEBRIS COLLECTION (EXCEPT ON TYPE 2 STREAMS).

N.T.S.

City of Woodinville DEPARTMENT OF PUBLIC WORKS	CONE TRASH RACK (OVERFLOW STRUCTURE)	466 revision date NOV, 98

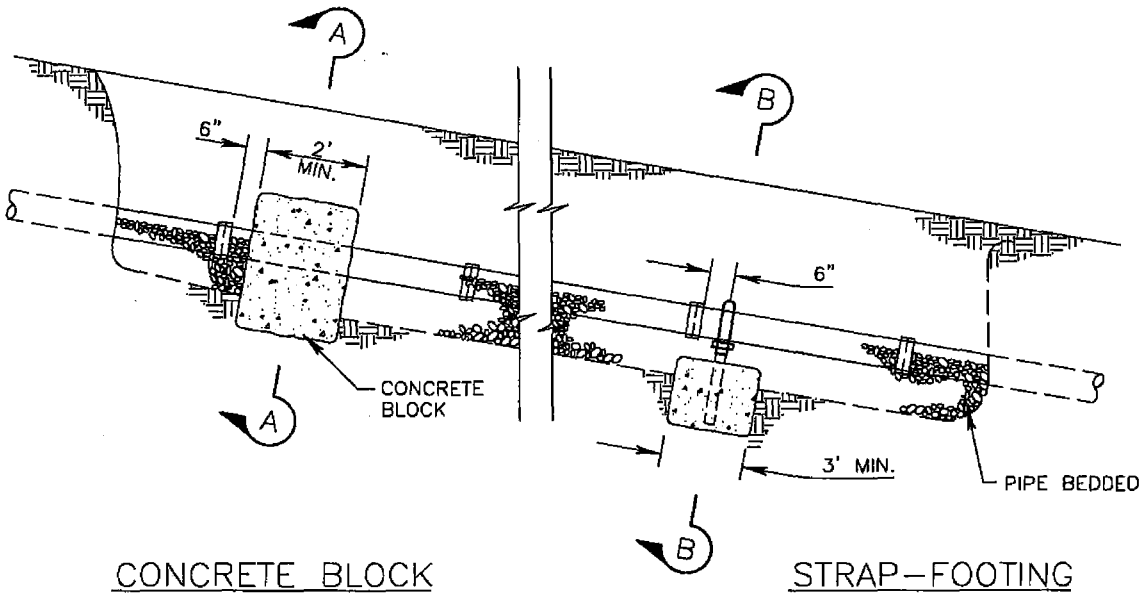

CONCRETE BLOCK ANCHOR

STRAP–FOOTING ANCHOR

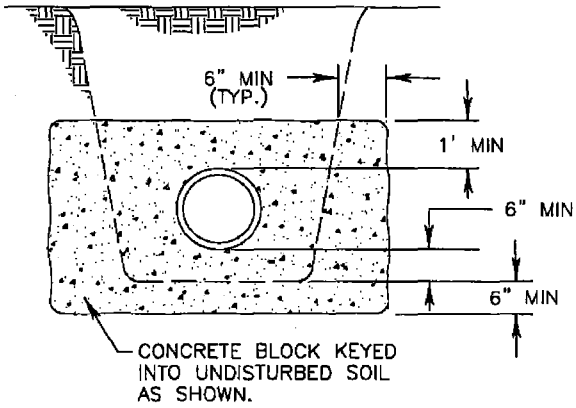

SECTION A–A

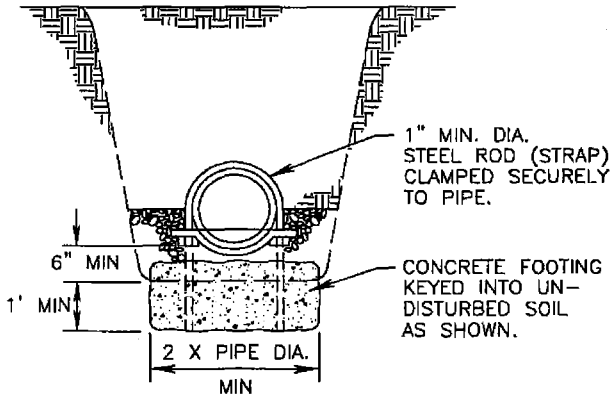

SECTION B–B

NOTES:

1 FOR HDPP, PIPE MUST BE FREE TO SLIDE INSIDE A 4' LONG SECTION OF PIPE ONE SIZE DIAMETER LARGER.

2 SEE TABLE 4.3.4.B OF K.C.S.W.D.M. FOR REQUIREMENTS.

N.T.S.

City of Woodinville DEPARTMENT OF PUBLIC WORKS	PIPE ANCHORS	467 revision date NOV, 98

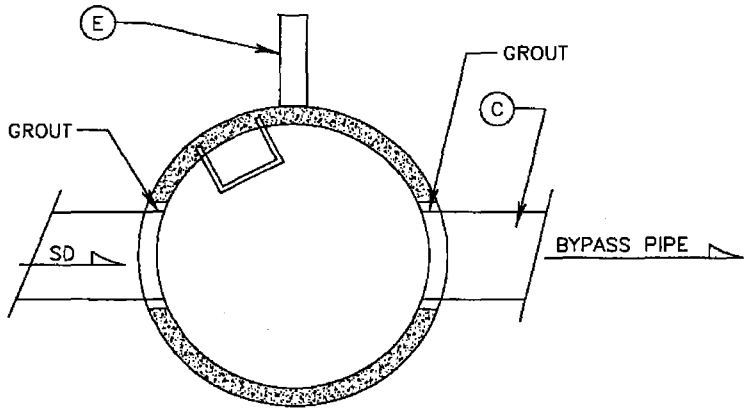

PLAN

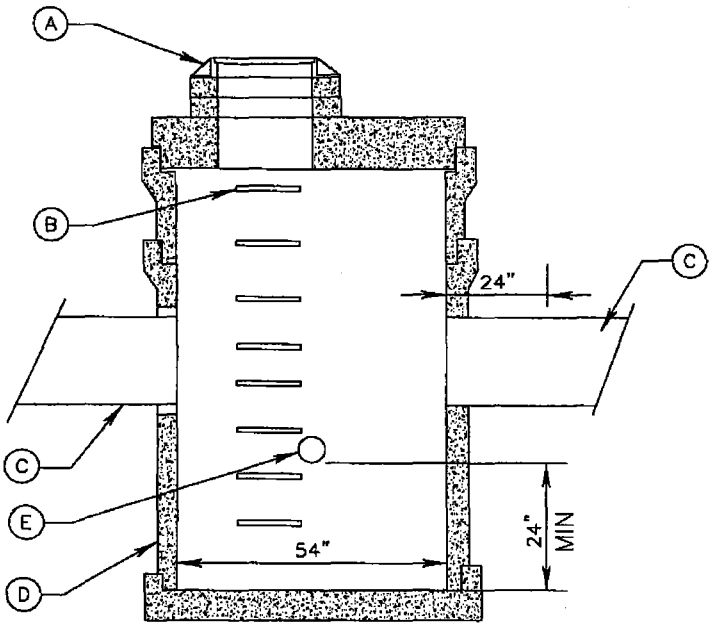

ELEVATION

(A) INSTALL MANHOLE ACCESS SEE STD. 414.

(B) STEPS.

(C) SEE PLAN AND SPECIFICATIONS FOR SIZE AND TYPE OF PIPE ENTERING AND EXITING CB. AND INVERT ELEVATIONS.

(D) 54" TYPE II CB. OR LARGER. 72" MIN. FOR WET PONDS.

(E) WET POND/VAULT INLET WITH SHEAR GATE OR A FLAP GATE.

NOTES:

1 THE CROWN OF THE VAULT INLET SHALL BE AT OR BELOW THE INVERT ELEVATION OF THE BYPASS PIPE.

2 THIS DETAIL IS A SCHEMATIC REPRESENTATION ONLY. ACTUAL CONFIGURATION WILL VARY DEPENDING ON SPECIFIC SITE CONSTRAINTS AND APPLICABLE DESIGN CRITERIA.

N.T.S.

City of Woodinville DEPARTMENT OF PUBLIC WORKS	FLOW DIVERSION STRUCTURE	468 revision date NOV, 98

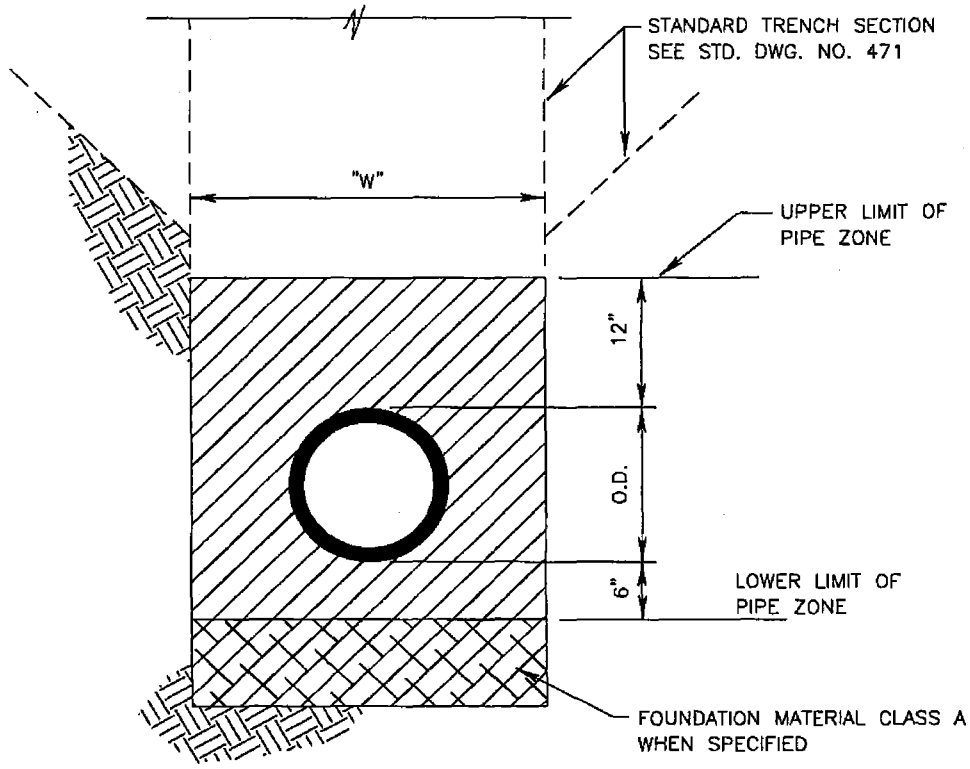

LIMITS OF TRENCH:

1 W = MAXIMUM WIDTH OF TRENCH. FOR PIPES 15" OR LESS IN DIAMETER W = 40". FOR PIPES 18" OR GREATER W = 1 1/2 x I.D. + 18".

BEDDING AND FOUNDATION MATERIALS:

1 BEDDING MATERIAL SHALL BE "BEDDING MATERIAL FOR RIGID PIPE" CONFORMING TO SECTION 9-03.15 OF THE STANDARD SPECIFICATIONS FOR ROAD, BRIDGE AND MUNICIPAL CONSTRUCTION WSDOT/APWA.

2 FOUNDATION MATERIAL, IF REQUIRED SHALL BE FOUNDATION MATERIAL CLASS A CONFORMING TO SECTION 9-03.17 OF THE STANDARD SPECIFICATIONS FOR ROAD, BRIDGE AND MUNICIPAL CONSTRUCTION WSDOT/APWA.

PROCEDURE FOR COMPACTION:

1 PROVIDE UNIFORM SUPPORT UNDER PIPE BARREL.

2 COMPACT BEDDING MATERIAL TO 90% MAXIMUM DENSITY EXCEPT DIRECTLY OVER PIPE, HAND TAMP ONLY.

3 HAND TAMP UNDER HAUNCHES.

N.T.S.

City of Woodinville DEPARTMENT OF PUBLIC WORKS	BEDDING FOR PIPE IN TRENCHES	470 revision date NOV, 98

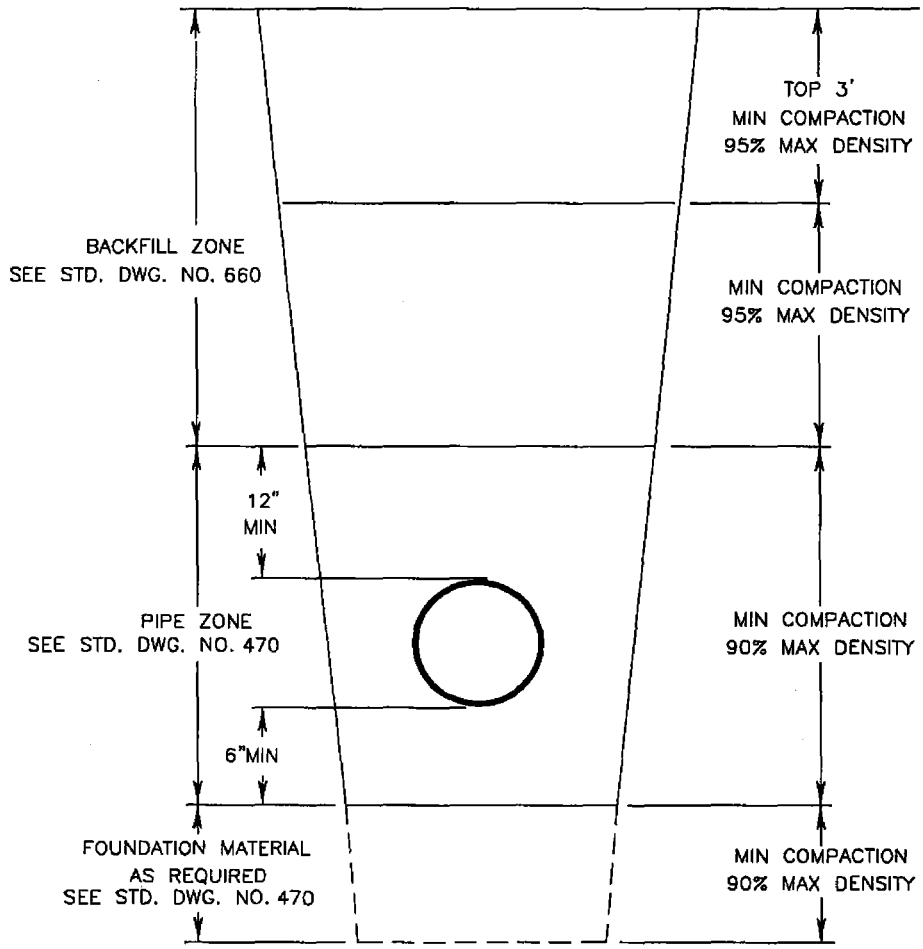

SECTION

NOTES:

1 ALL BACKFILL MATERIAL SHALL BE PLACED IN LIFTS NOT TO EXCEED 12 INCHES BEFORE COMPACTION UNLESS AUTHORIZED BY THE ENGINEER DUE TO THE CHARACTER OF THE MATERIAL AND THE COMPACTING EQUIPMENT.

2 MECHANICAL COMPACTION OF BACKFILL MATERIAL SHALL NOT BEGIN UNTIL THE DEPTH OF COMPACTED BACKFILL MATERIAL IS 2 FEET ABOVE THE TOP OF PIPE.

3 EACH LIFT SHALL BE MECHANICALLY COMPACTED TO THE REQUIRED DENSITY PRIOR TO PLACING SUCCEEDING LIFTS OF BACKFILL MATERIAL.

4 COMPACTION TESTS SHALL BE AS REQUIRED BY THE CITY CONSTRUCTION INSPECTOR, BUT IN NO CASE LESS THAN 2 TESTS EVERY 200 FEET OF TRENCH. (ONE AT SUBGRADE AND ONE AT 50% OF TRENCH DEPTH).

5 IN-PLACE DENSITY WILL BE DETERMINED BY ONE OR MORE OF THE FOLLOWING METHODS.
(A) ASTM D1556, TEST FOR DENSITY OF SOIL IN-PLACE BY THE SAND CONE METHOD.
(B) ASTM D2167 – (RUBBER BALLOON METHOD)
(C) ASTM D2922 – (NUCLEAR METHOD)

6 LABORATORY DENSITY WILL BE DETERMINED BY ASTM D698, MOISTURE-DENSITY RELATIONS OF SOILS AND SOIL-AGGREGATE MIXTURES.

N.T.S.

City of Woodinville DEPARTMENT OF PUBLIC WORKS	TRENCH COMPACTION	471 revision date NOV, 98

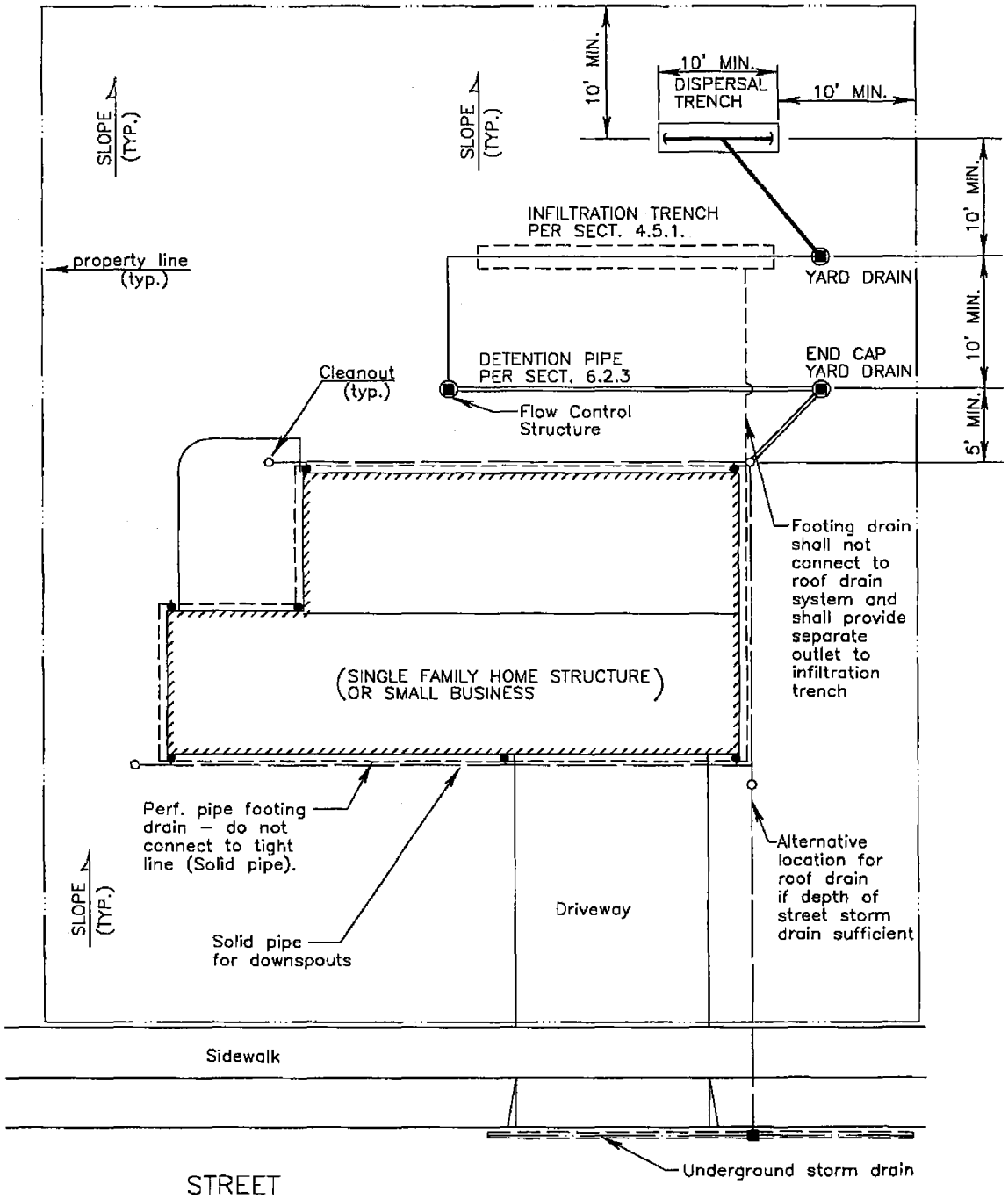

This shows a typical detention system on a site, acceptable locations for the detention pipe, connections of downspouts, catchbasins and discharge of the water onto a natural location must be approved by the Public Works Department

N.T.S.

City of Woodinville DEPARTMENT OF PUBLIC WORKS	DETENTION/INFILTRATION SYSTEM FOR SMALL PROJECTS	490 revision date NOV, 98

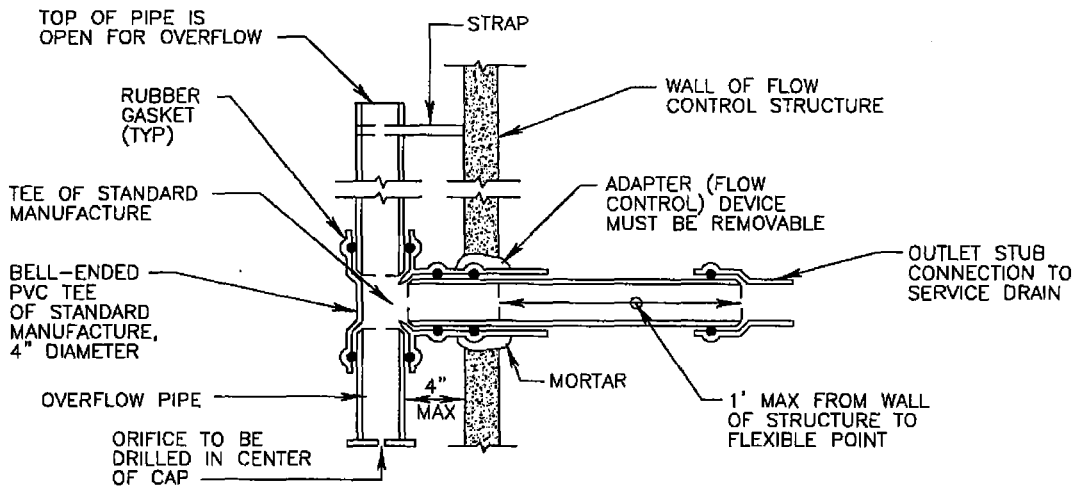

FLOW CONTROL DEVICE

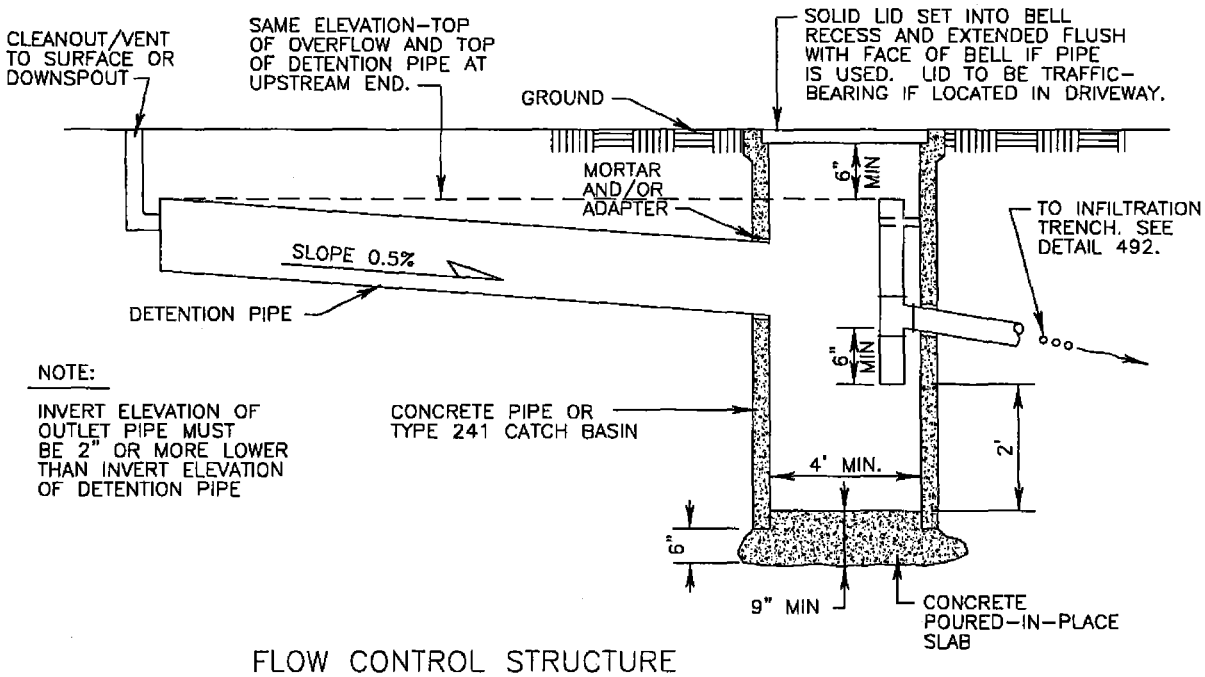

NOTE:

INVERT ELEVATION OF OUTLET PIPE MUST BE 2" OR MORE LOWER THAN INVERT ELEVATION OF DETENTION PIPE

FLOW CONTROL STRUCTURE

NOTES:

1 OVERFLOW AND OUTLET PIPES HAVE SAME DIAMETER, 4" MIN.

2 THIS DESIGN IS ONLY APPROVED FOR PROPERTY WITH LESS THAN 5,000 SQUARE FEET OF IMPERVIOUS SURFACE.

3 SEE CHAPTER 6 OF THE KCSWDM.

N.T.S.

City of Woodinville DEPARTMENT OF PUBLIC WORKS	CONTROL STRUCTURE FOR SMALL PROJECTS	491 revision date NOV, 98

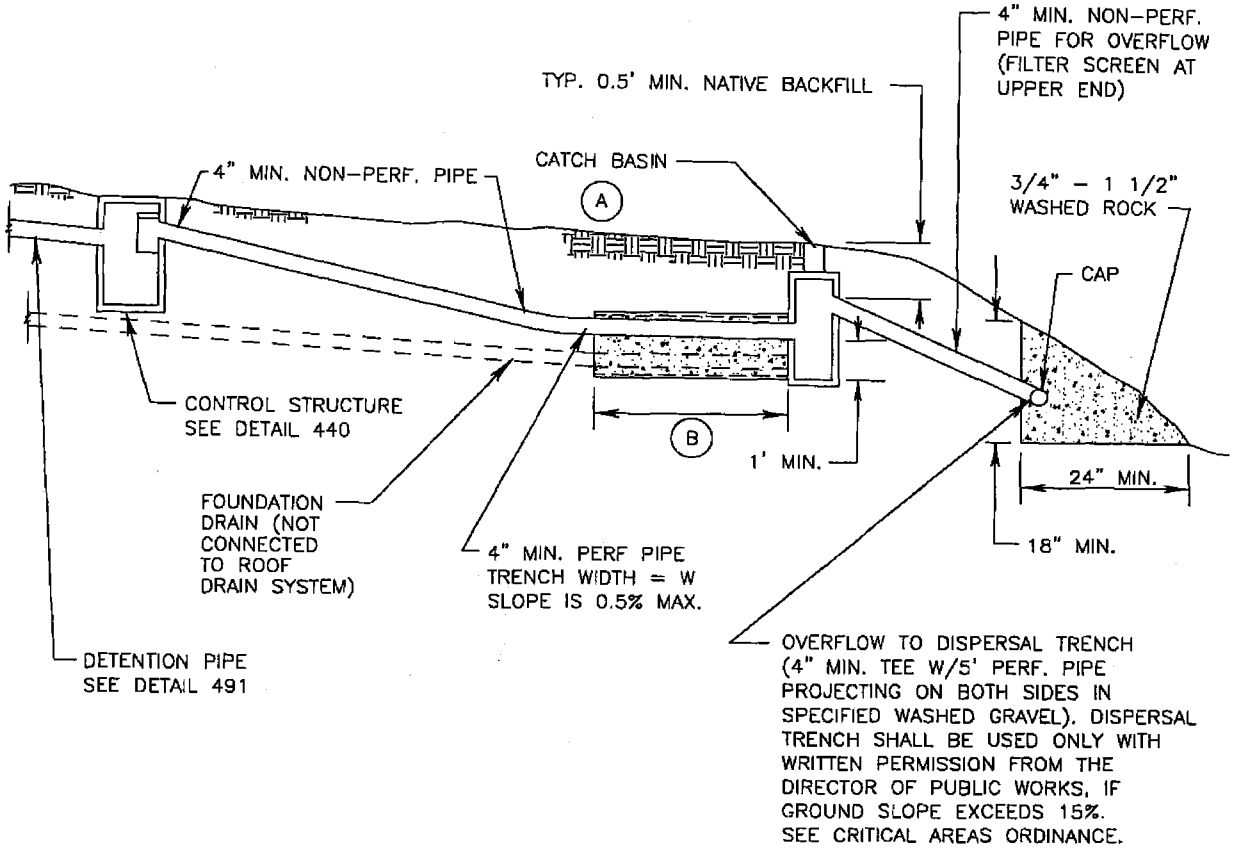

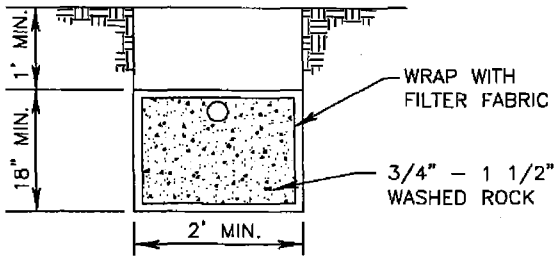

TYPICAL TRENCH SECTION
N.T.S.

(A) MAY BE VERTICAL 24" DIAMETER SD PIPE WITH SOLID LID OR A TYPE I CATCH BASIN. SEE DETAILS 412, 413, 414.

(B) LENGTH PER KING COUNTY SURFACE WATER DESIGN MANUAL SEC. 4.5.1.

N.T.S.

City of Woodinville DEPARTMENT OF PUBLIC WORKS	INFILTRATION SYSTEM FOR SMALL PROJECTS	492 revision date NOV, 98