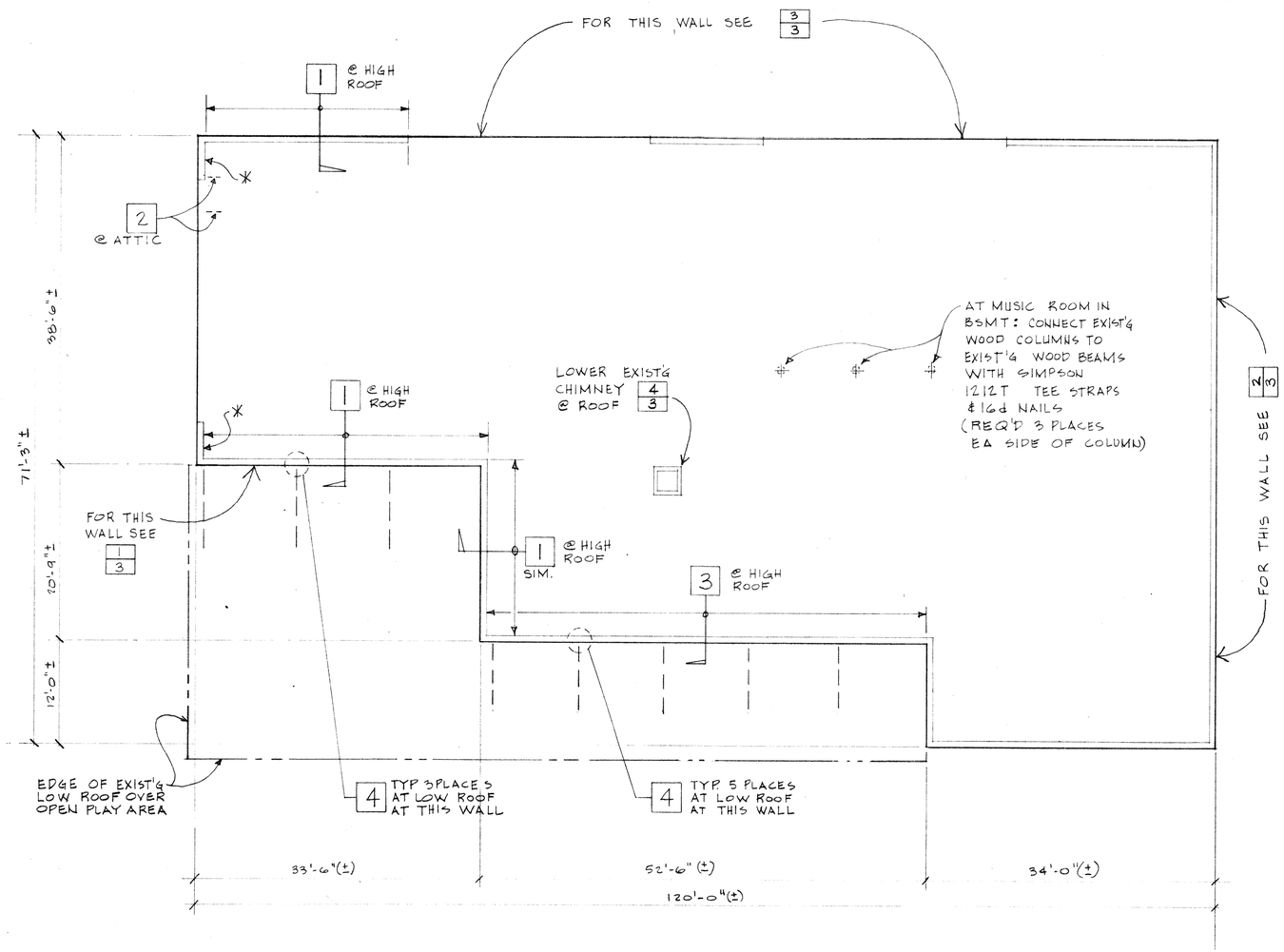

BUILDING PLAN

1/8"=1'-0"

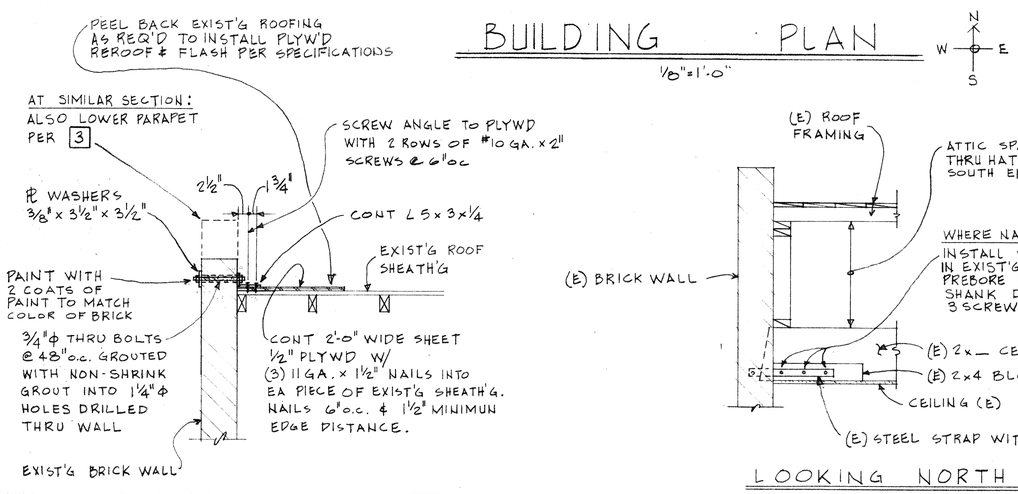

SECTION 1

3/4"=1'-0

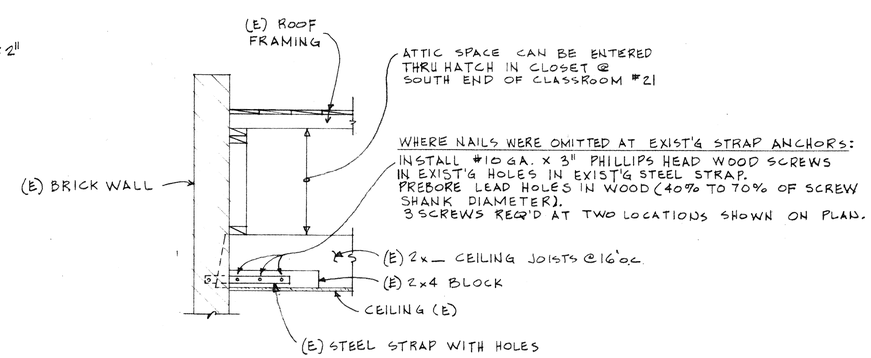

LOOKING NORTH IN ATTIC

DETAIL 2

3/4"=1'-0

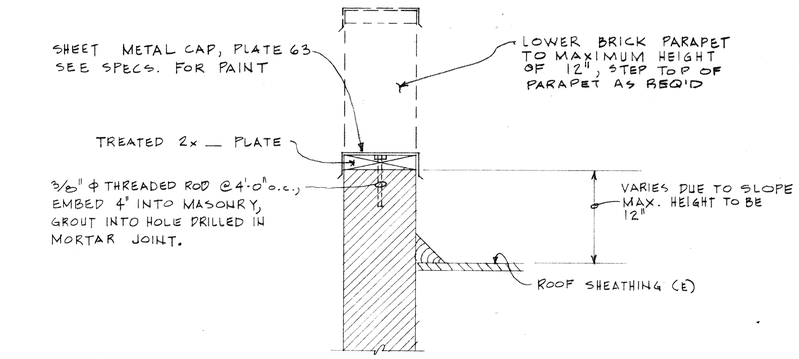

SECTION 3

1 1/2"=1'-0

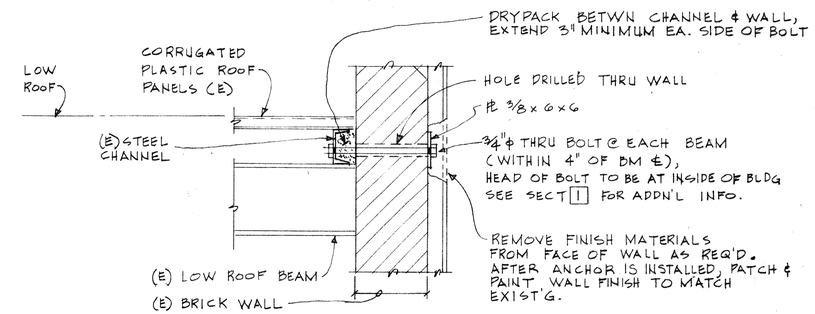

LOOKING WEST

DETAIL 4

1 1/2"=1'-0"

NOTES

1. REPAIR DETERIORATED ROOFING AT PARAPET WHERE NOTED BY "*".

Revisions

STRUCTURAL IMPROVEMENTS AT WOODINVILLE ANNEX
13209 N.E. 175th ST., WOODINVILLE, WASHINGTON
NORTHSHORE SCHOOL DISTRICT #417
BOTHELL, WASHINGTON

MH CONSULTING ENGINEERS
MACDONALD McLAREN HAMMOND INC
215 EIGHTH AVENUE NORTH
SEATTLE WASHINGTON 98109
(206) 622-4580

Date 5/28/85
Scale AS SHOWN
Drawn
Job 85056
Sheet 2 OF 3